REVISIONS					
MF	ZONE	LTR	DESCRIPTION	DATE	APPR
		D	REPLACES REV C W/CHNG		
			SEE ERR NOR 40601	6MAR74	
		E	(1) SEE NOR 76E0044-0002	2 AUG 76	
		F	NOR W3S2037/83-09-13	83-10-21	
		G	REDRAWN W/CHANGE NOR W4S2049/840719 (ECP W4S2067/841224)	870621	

NOTES:

1. STEEL, CARBON; TEMPER NO. 2 OR 3; ASTM A 109.
2. FINISH 125√ ALL OVER. (E)
3. FINISH 3.3.1 OF MIL-STD-171 WITH VV-L-800 SUPPLEMENTARY OIL TREATMENT.
4. MIL-W-13855 APPLIES.

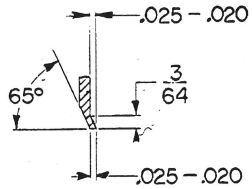

SECTION A-A

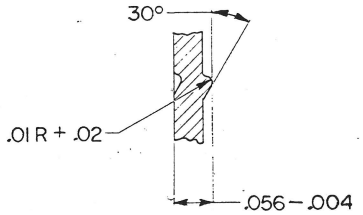

SECTION B-B
SCALE 10/1

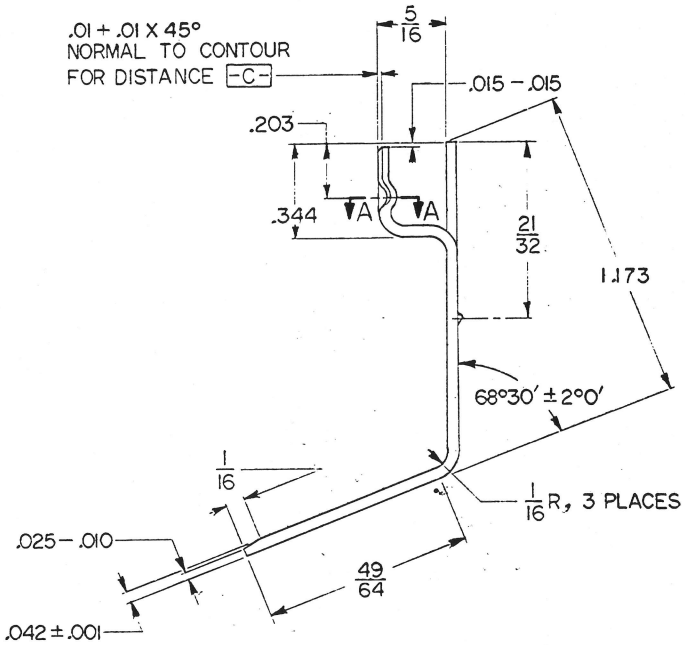

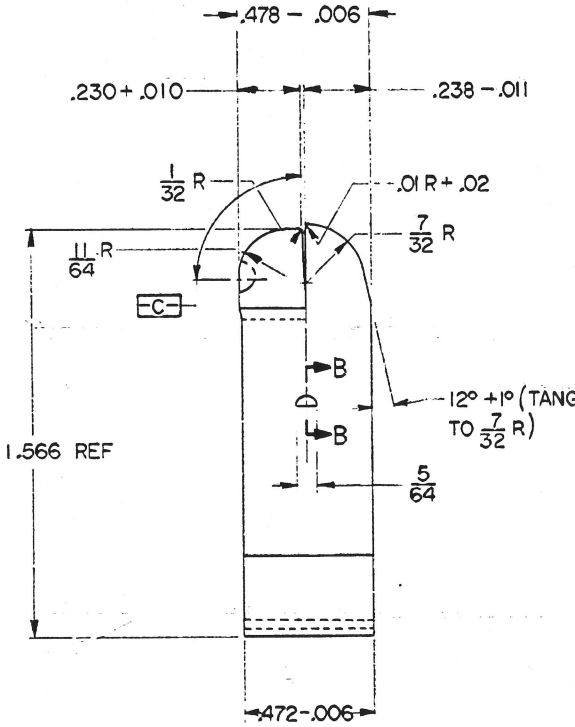

CURRENT DESIGN ACTIVITY CAGE CODE 19205
U.S. ARMY
ARMAMENT RESEARCH, DEVELOPMENT AND ENGINEERING
PICATINNY ARSENAL, NEW JERSEY 07806-50

PART NO. 6008608

MECHANICAL PROPERTIES			
YP			
TS			
EL 2			
RA		C5508694	PISTOL, CAL .45, M1911A1, NATL MATCH
BH			
RH		B12006353	PISTOL, M15
		NEXT ASSY.	USED ON
		APPLICATION	

UNLESS OTHERWISE SPECIFIED DIMENSIONS ARE IN INCHES
TOLERANCES ON FRACTIONS ± 1/64 DECIMALS .XXX ± .015
ANGLES ± 2°
MATERIAL: SEE NOTE 1
HEAT TREATMENT
FINAL PROTECTIVE FINISH: SEE NOTE 3

ORIGINAL DATE OF DRAWING: 1 MAY 28
DRAFTSMAN / TRACER / CHECKER / CHECKER / ENGINEER / CHIEF ENGINEER / SUBMITTED / APPROVED

DEPT OF THE ARMY
SPRINGFIELD ARMORY, SPRINGFIELD,

FOLLOWER, MAGAZINE

DWG SIZE	CAGE CODE	
D	19205	6008608
SCALE 4/1	UNIT WT	SHEET 1 OF

SWERI FORM 40D. 1 MAR 67

D6008609

REVISIONS			
SYM	DESCRIPTION	DATE	
14		14 SEP 51	
A	REDRAWN AND REVISED WAS "C" SIZE, SEE EO SA 26316	27NOV62	
B	SEE EO NO. RIA-13890	1-6-67	
C	(7) SEE ERR HQR 30687-2	19 JUN 73	
D	SEE ERR HQR 50605	10 FEB 75	
E	NOR W8S8009 79-02-14	791024	
F	NOR W3S2030 830808 ECP W4S2037 840824	850821	
G	NOR W4S2049/840719 (ECP W4S2067/841224)	870621	

NOTES:

1. FINISH 125 √ ALL OVER.
2. ALL EDGES SHALL BE BROKEN .005+.010 UNLESS OTHERWISE SPECIFIED.
3. MATERIAL –
   A-FOR WROUGHT MATERIAL: STEEL, CARBON; GRADE 1015 THRU 1020, 1117, ASTM A108.
   B-FOR INVESTMENT (ALTERNATIVE) CASTING: STEEL, CMPSN IC 8620, MIL-S-22141. CLASSIFICATION AND INSPECTION OF INVESTMENT CASTING SHALL BE IN ACCORDANCE WITH CLASS 2, GRADE B, MIL-C-6021.
4. HEAT TREATMENT: –
   A-FOR WROUGHT MATERIAL: CARBURIZE AT 1575°F TO 1600°F TO CASE DEPTH .003 TO .005. OIL QUENCH. TEMPER AT 350°F MINIMUM FOR 30 MINUTES. HEAT TREATMENT METHOD IS FOR GUIDANCE, EXCEPT THAT CASE DEPTH AND HARDNESS REQUIREMENTS ARE MANDATORY AND TIME AT TEMPERATURE SHALL NOT BE REDUCED BELOW THAT SPECIFIED.
   B-FOR INVESTMENT CASTING: CARBURIZE AT 1575°F TO 1600°F TO CASE DEPTH .003 TO .005. OIL QUENCH. TEMPER AT 350°F MINIMUM FOR ONE HOUR. HEAT TREATMENT METHOD IS FOR GUIDANCE, EXCEPT THAT CASE DEPTH AND HARDNESS REQUIREMENTS ARE MANDATORY AND TIME AT TEMPERATURE SHALL NOT BE REDUCED BELOW THAT SPECIFIED.
5. MIL-W-13855 APPLIES.
6. FINISH 5.3.1.2 OF MIL-STD-171.

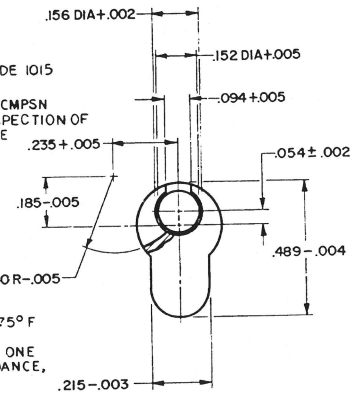

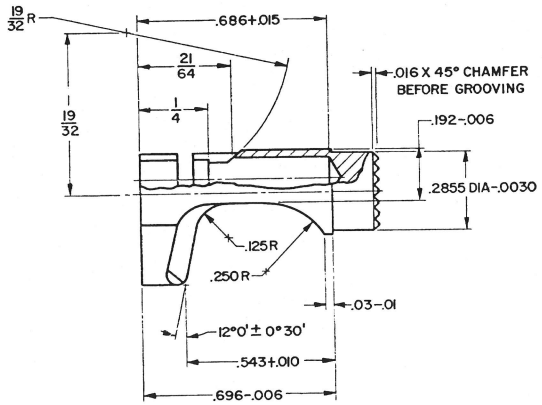

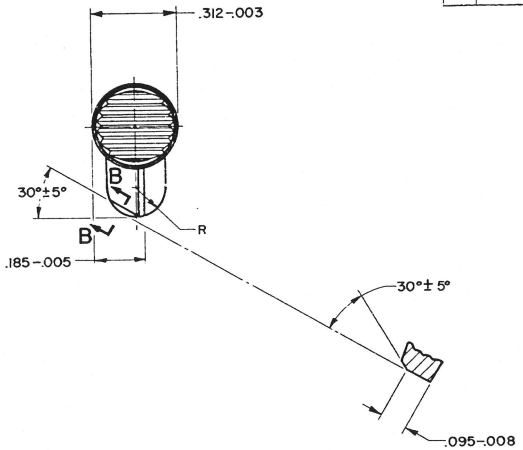

SECTION B-B

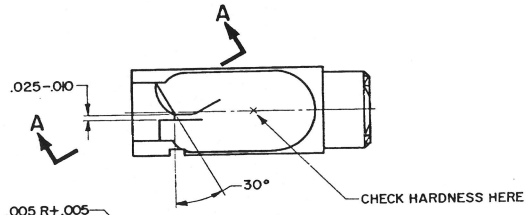

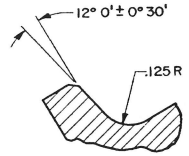

PARTIAL SECTION A-A

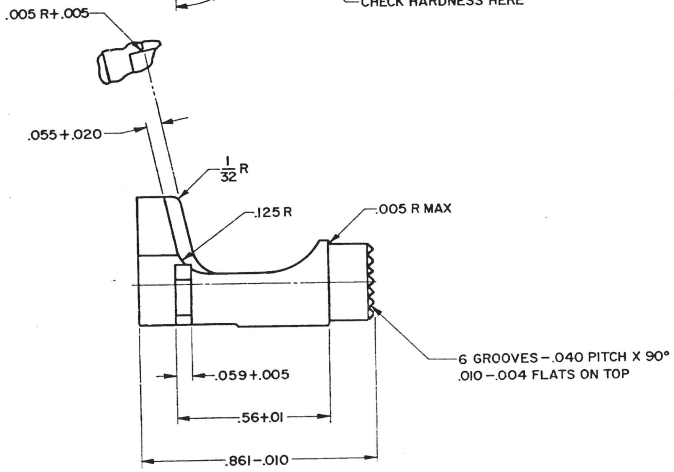

D600860

CURRENT DESIGN ACTIVITY CAGE CODE 19200
U.S. ARMY
ARMAMENT RESEARCH, DEVELOPMENT AND ENGINEERING CE
PICATINNY ARSENAL, NEW JERSEY 07806-5000

PART NO. 6008609

CAGE CODE 1920

B12006317	PISTOL, M15	PHYSICAL PROPERTIES	
F7791205	PISTOL, M9A1	YP	
	NATL MATCH	TS	
F7265655	PISTOL, M9A1	EL	
		PA	
		BH	
		RH	15 N
			90-92

APPLICATION
DO NOT APPLY PART NO. UNLESS SPECIFIED

UNLESS OTHERWISE SPECIFIED
DIMENSIONS ARE IN INCHES
TOLERANCES ON FRACTIONS ±1/64 DECIMALS ±.010 ANGLES ±2°
MATERIAL: SEE NOTE 3
HEAT TREATMENT: SEE NOTE 4
FINAL PROTECTIVE FINISH: SEE NOTE 6

ORIGINAL DATE OF DRAWING 1 MAY 28
DRAFTSMAN JTM CHECKER MSB
TRACER RAP CHECKER
ENGR SUBMITTED
APPROVED BY ORDER OF THE CHIEF OF ORDNANCE
LT COL ORD CORPS

CATCH, MAGAZINE

DEPT OF THE ARM
SPRINGFIELD ARMO
SPRINGFIELD, MAS

SCALE 4/1 UNIT WT .01 LB

DWG SIZE D 600860 SHEET 1 OF

RMH

DRAWING SIZE C

REVISIONS				
ZONE	LTR	DESCRIPTION	DATE (YR MO DA)	APPROVED
	G	REDRAWN W/CHANGE NOR W4S2049/840719 (ECP W4S2067/841224)	870621	ORFI

NOTES:
1. FINISH 125√ ALL OVER.
2. UNLESS OTHERWISE SPECIFIED, ALL INTERIOR CORNERS SHALL BE ROUNDED WITH FILLET RADII OF FROM .005 TO .015 INCH.
3. STEEL, CARBON: SAE 1020, 1116, 1117 ASTM A576 OR ASTM A108.
4. MIL-W-13855 APPLIES.
5. FINAL PROTECTIVE FINISH: FINISH 5.3.1.2 OF MIL-STD-171.

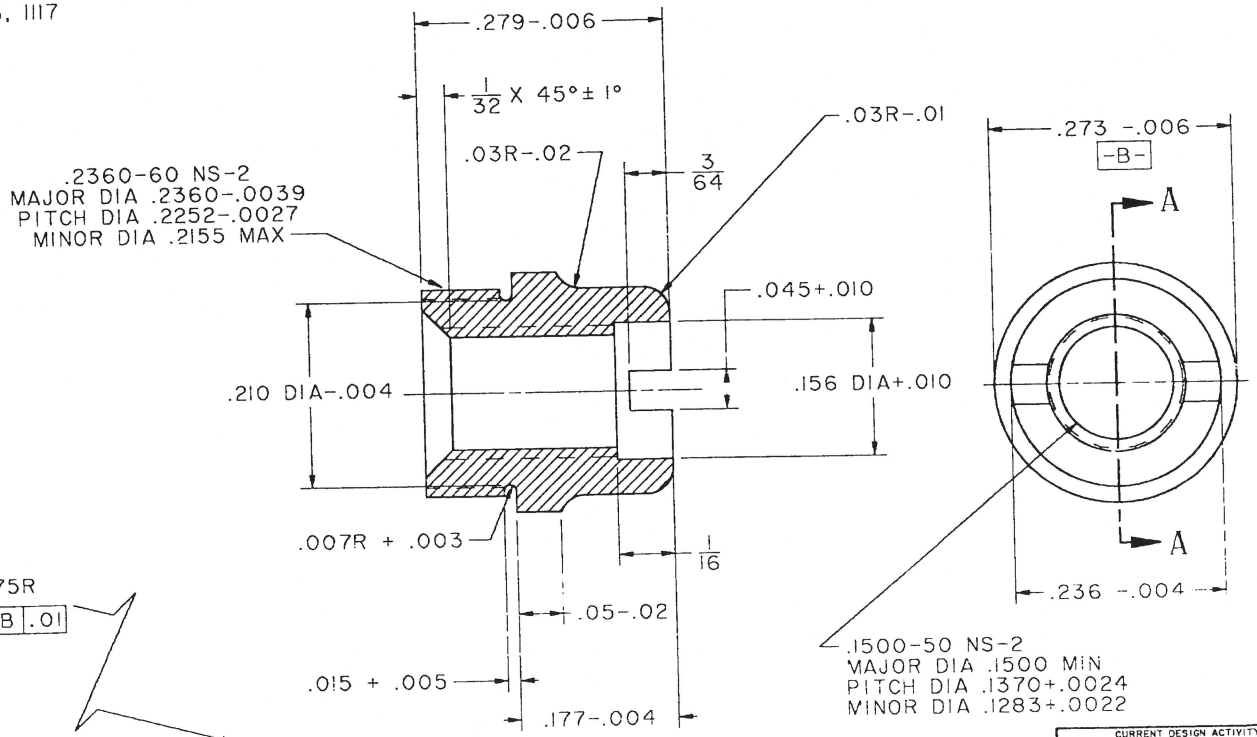

SECTION A-A

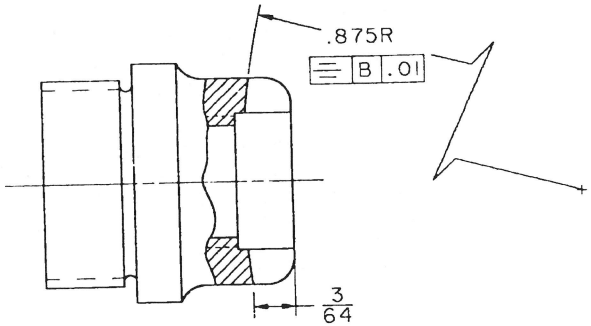

ALTERNATIVE DESIGN

CURRENT DESIGN ACTIVITY CAGE CODE 19200
U.S. ARMY
ARMAMENT RESEARCH, DEVELOPMENT AND ENGINEERING CENTER
PICATINNY ARSENAL, NEW JERSEY 07806-5000

THIS DRAWING HAS BEEN GENERATED ON A CAD SYSTEM LOCATED AT ARDEC, PICATINNY ARSENAL, N.J. CHANGES MUST BE INCORPORATED VIA THIS SYSTEM.

PART NO. 6019022

PMIC		
MECHANICAL PROPERTIES		
YP		
TS		
EL2		
RA		
BH		
RH		
	D12006342	PISTOL, M15
		PISTOL, M9IIA1
	F7790428	NATL MATCH
	D6508389	PISTOL, M9IIA1
NEXT ASSY	USED ON	
APPLICATION		

DO NOT SCALE DRAWING
UNLESS OTHERWISE SPECIFIED DIMENSIONS ARE IN INCHES
TOLERANCES ON
DECIMAL: 2 PL ±, 3 PL ±.010
FRACTION: ±1/64

THIRD ANGLE PROJECTION

MATL ENGR | CADDS REV - 263

CONTRACT NUMBER

CONTRACTOR

DRAWN BY	DATE(YR-MO-DA)
F.C.L.	28-06-01
CHECKER L.S.C.	ENGINEER H.E.S.

DRAWING APPROVAL: V. A. LUUKKONEN

DESIGN APPROVAL: S. C. SHULTZ

DEPT OF THE ARMY
SPRINGFIELD ARMORY
SPRINGFIELD, MASS

BUSHING, STOCK SCREW

SIZE	CAGE CODE	
C	19205	6019022
SCALE 10/1	UNIT WT. .002 LB	SHEET 1 OF 1

ORFI

SMCAR FORM 67, 1 DEC 87(TEMP), REPLACES SMCAR FORM 67, 1 MAR 87(TEMP), WHICH MAY BE USED UNTIL EXHAUSTED

NOTES:
1. FINISH 125 ALL OVER.
2. HEAT TREATMENT: CARBURIZE AT 1600°F ± 25° TO A CASE DEPTH .002 TO .005: OIL QUENCH. TEMPER AT 450°F FOR 20 MINUTES AT HEAT. HEAT TREATMENT METHOD IS FOR GUIDANCE, EXCEPT THAT CASE DEPTH AND HARDNESS REQUIREMENTS ARE MANDATORY AND TIME AT TEMPERATURE SHALL NOT BE REDUCED BELOW THAT SPECIFIED. THE USE OF STRAIGHT CYANIDE BATH OR CARBO-NITRIDING PROCESS SHALL NOT BE PERMITTED WITHOUT PRIOR APPROVAL OF THE CONTRACTING OFFICER.
3. STEEL, CARBON: GRADE 1018, 1020, 1117: ASTM A108.
4. MIL-W-13855 APPLIES.
5. FINISH 5.3.1.2 OF MIL-STD-171.

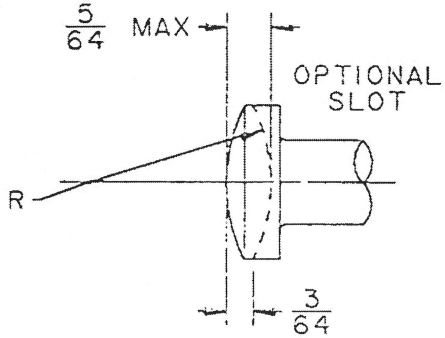

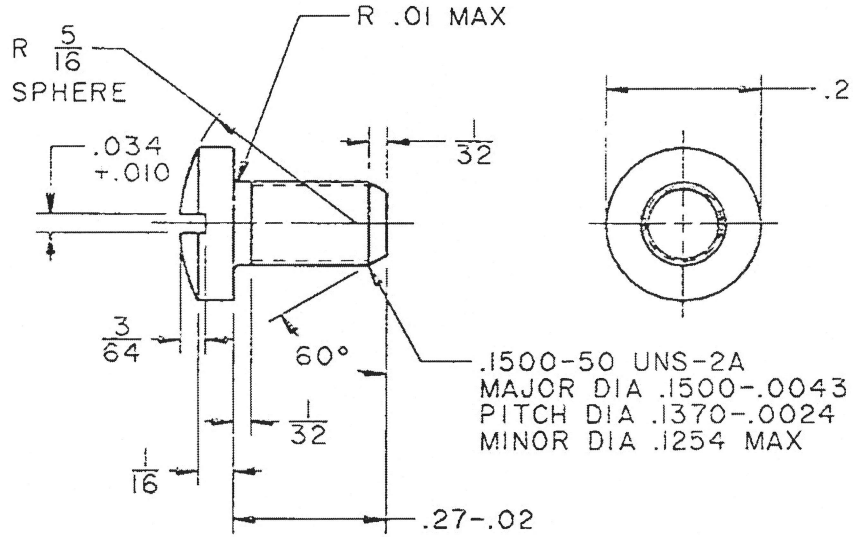

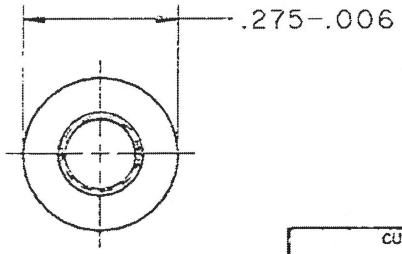

REVISIONS

ZONE	LTR	DESCRIPTION	DATE (YR MO DA)	APPROV
	F	REDRAWN W/CHANGE NOR W4S2049/840719 (ECP W4S2067/841224)	870621	ORFI

CURRENT DESIGN ACTIVITY CAGE CODE 19200
U.S. ARMY
ARMAMENT RESEARCH, DEVELOPMENT AND ENGINEERING CENTER
PICATINNY ARSENAL, NEW JERSEY 07806-5000

THIS DRAWING HAS BEEN GENERATED ON A CAD SYSTEM LOCATED AT ARDEC, PICATINNY ARSENAL, N.J. CHANGES MUST BE INCORPORATED VIA THIS SYSTEM.

PART NO. 6019023

PMIC			DO NOT SCALE DRAWING
			UNLESS OTHERWISE SPECIFIED DIMENSIONS ARE IN INCHES TOLERANCES ON DECIMAL 2 PL ± 3 PL ± FRACTION ±1/64
MECHANICAL PROPERTIES	F7791205	PISTOL,M9IIA1	
YP		NATL MATCH	THIRD ANGLE PROJECTION
TS			
EL2	F7265655	PISTOL,M9IIA1	
RA			
BH	B12006308	PISTOL,M15	
RH	NEXT ASSY	USED ON	MATL ENGR / CADDS REV - 263
	APPLICATION		

CONTRACT NUMBER		DEPT OF THE ARMY SPRINGFIELD ARMORY SPRINGFIELD, MASS
CONTRACTOR		SCREW, STOCK
DRAWN BY J.J.V.	DATE(YR-MO-DA) 28-05-01	
CHECKER L.S.C.	ENGINEER H.E.S.	
DRAWING APPROVAL V. A. LUUKKONEN		SIZE B / CAGE CODE 19205 / 6019023
DESIGN APPROVAL S. C. SHULTZ		SCALE 4/1 / UNIT WT. .0021 LB / SHEET

SMCAR FORM 66, 1 MAR 88(TEMP) REPLACES SMCAR FORM 66, 1 JUL 87(TEMP) WHICH MAY BE USED UNTIL EXHAUSTED

00 FORM 1 APR 54 1176

B6147114

REVISIONS			
SYM	DESCRIPTION	DATE	APPROVAL
9	←	28DEC49	
A	REDRAWN AND REVISED SEE EO SA 26316	27NOV62	
B	(1-2) SEE EO.RIA-14141	4.21.67	
C	(3) SEE ERR HQR 30687-1	23MAY73	
D	(3) SEE ERR HQR 50631	5MAY75	
E	NORWOS2002 81-02-26	82-01-15	

NOTES:

1. FOR WELDED DESIGN SEE DRAWING B 7265559.
2. HEAT TREATMENT: HEAT TOP END FOR DISTANCE [-B-] AT 1500° TO 1550° F; OIL QUENCH. TEMPER 20 MINUTES AT 700° F. HEAT TREATMENT METHOD IS FOR GUIDANCE EXCEPT THAT TEMPERING TIME SHALL NOT BE REDUCED BELOW THAT SPECIFIED.
3. HARDNESS FOR DISTANCE [-B-] A71 TO A75. (B1) (C)
4. MIL-W-13855 APPLIES.
5. THIS INFORMATION MAY BE INSCRIBED ON PART NO. 6008606 PRIOR TO ASSEMBLY. (D)

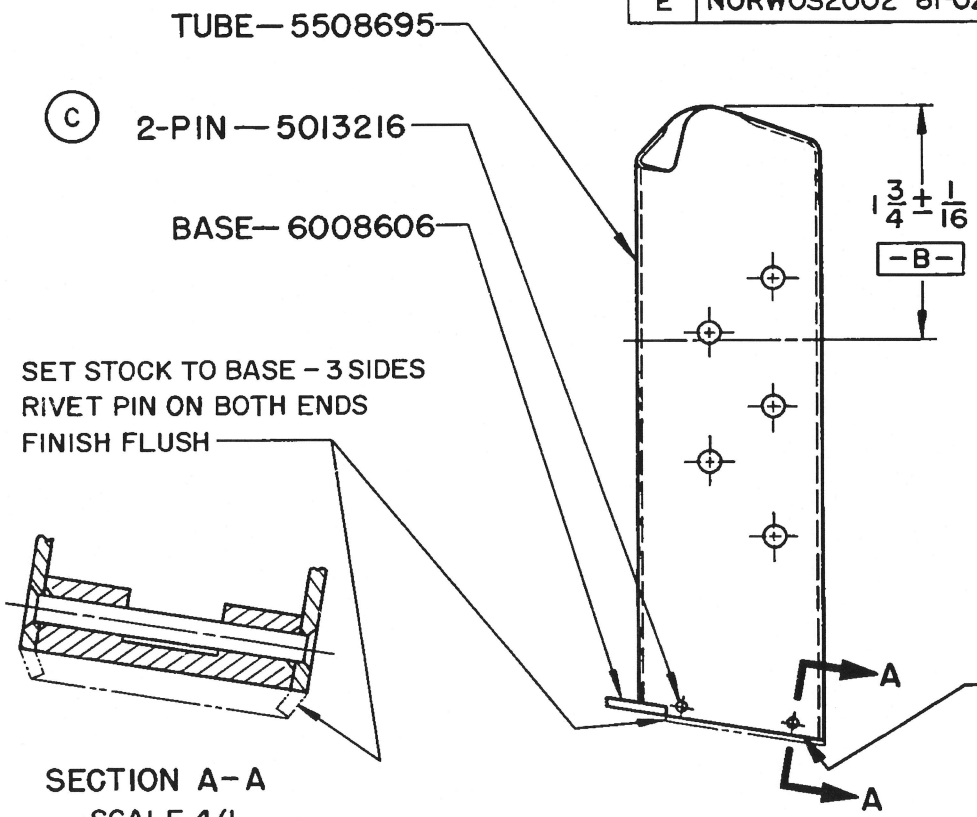

(D) INSCRIBE THE FOLLOWING INFORMATION .09 HIGH X .010 +.005 DEEP PER MIL-STD-130. 19200-ASSY 5508694 MFR: CODE IDENT NO. (SEE NOTE 5)

(C) (B2) FOR LIST OF PARTS, SEE ENGINEERING PARTS LIST 6147114

CODE IDENT NO. ~~19204~~

US ARMY ARMAMENT RESEARCH AND DEVELOPMENT COMMAND
DOVER, NEW JERSEY 07801 PART NO. 6147114

CODE IDENT NO.
19200

NEXT ASSY	USED ON
B12006352	PISTOL, M15
	PISTOL, M1911A1
	NATL MATCH
C5508694	PISTOL, M1911A1

(D)

APPLICATION: ~~DO NOT~~ DO — APPLY PART NO. ~~AS SPECIFIED~~

PHYSICAL PROPERTIES	
YP	
TS	
EL2	
RA	
BH	
RH	SEE NOTE 3

UNLESS OTHERWISE SPECIFIED
DIMENSIONS ARE IN INCHES
TOLERANCES ON FRACTIONS — DECIMALS ±.01 — ANGLES —
MATERIAL —
HEAT TREATMENT SEE NOTE 2
FINAL PROTECTIVE FINISH: FINISH 3.3.1 OF MIL-STD-171 W/ VV-L-800 SUPPLEMENTARY OIL TREATMENT

ORIGINAL DATE OF DRAWING 15 JAN 36
DRAFTSMAN E.R.C. CHECKER K.T.M.
TRACER E.E.L. CHECKER A.J.S.
SUBMITTED ORD CORPS
APPROVED BY ORDER OF THE CHIEF OF ORDNANCE, LT COL ORD CORPS

TUBE, MAGAZINE, ASSEMBLY

SCALE 1/1 UNIT WT .12 LB

~~DEPT OF THE ARMY~~
~~ROCK ISLAND ARSENAL~~
~~ROCK ISLAND, ILL 61201~~

DWG SIZE B — 6147114
SHEET 1 OF 1

RMH

NOTES:
1. FINISH 63 EXCEPT AS NOTED.

2. UNLESS OTHERWISE SPECIFIED ALL INTERIOR CORNERS SHALL BE ROUNDED WITH FILLET RADII OF FROM .005 TO .015 INCH.
3. HEAT TREATMENT: CARBURIZE TO .003 TO .005 CASE DEPTH. OIL QUENCH. TEMPER AT 350°F MINIMUM FOR 30 MINUTES. HEAT TREATMENT METHOD IS FOR GUIDANCE, EXCEPT THAT CASE DEPTH AND HARDNESS REQUIREMENTS ARE MANDATORY AND TIME AT TEMPERATURE SHALL NOT BE REDUCED BELOW THAT SPECIFIED. THE USE OF STRAIGHT CYANIDE BATH OR CARBO-NITRIDING PROCESS SHALL NOT BE PERMITTED WITHOUT PRIOR APPROVAL OF THE CONTRACTING OFFICER.
4. FINISH 5.3.1.2 OF MIL-STD-171, AND MOVE FROM ZONE B-8 TO ZONE D-8.

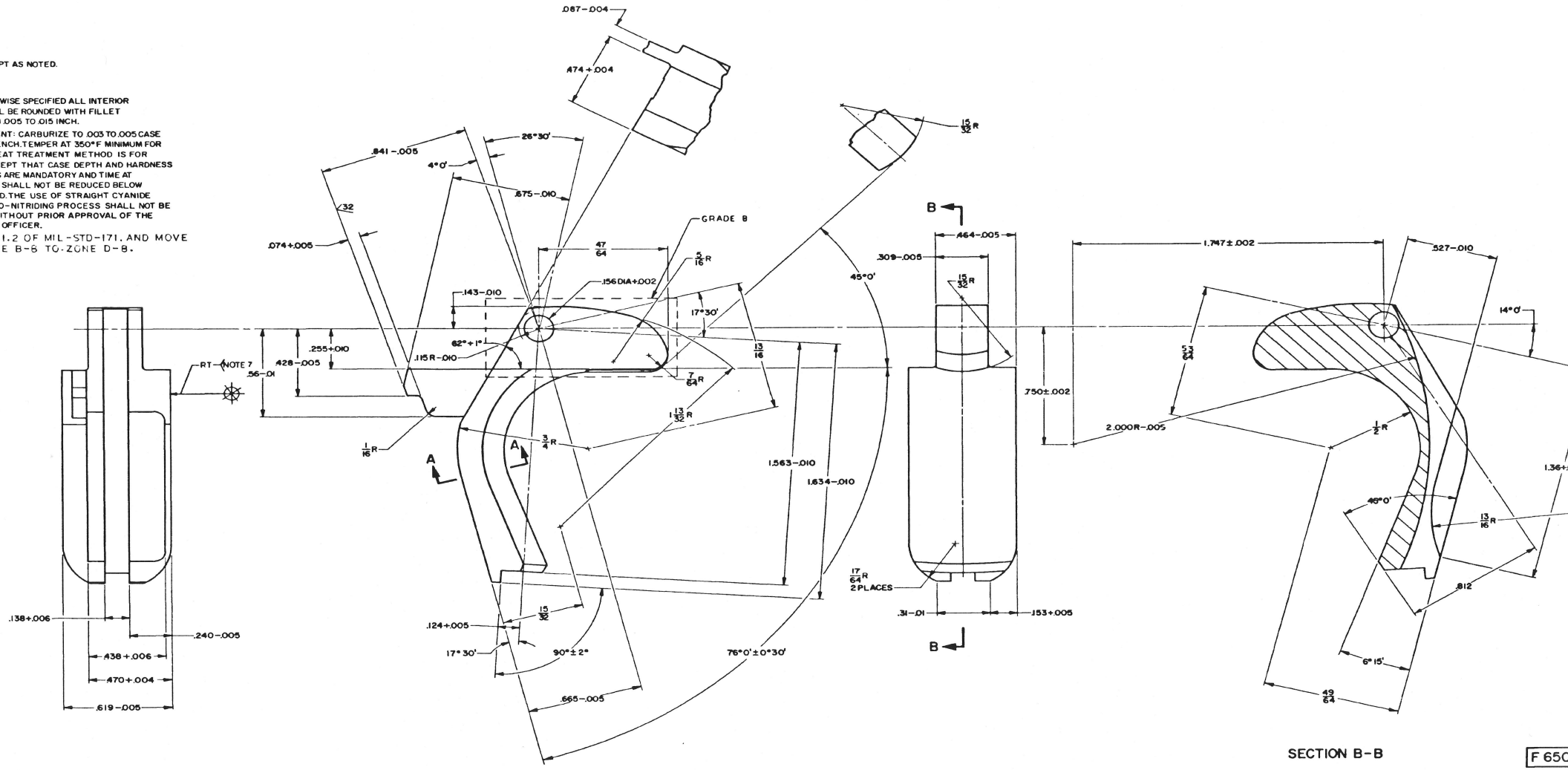

SECTION B-B

NOTES:
5. MIL-W-13855 APPLIES.
7. ~~MATERIAL:~~
~~A. STEEL, [illegible] ASTM A108~~ (B)
~~B. [illegible]~~ (C)
6. MATERIAL:
A. STEEL, CARBON; SAE 1018 THRU 1020, 1117; ASTM A108.
B. INVESTMENT CASTING IC8620, SPEC MIL-S-22141; INSPECTION: CLASS 2, GRADE B AND C PER MIL-C-6021

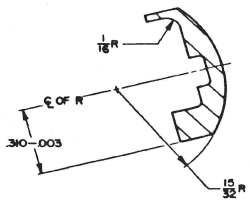

SECTION A-A

H	NOR GCS3050/F0030C6BC1101	
G	REDRAWN W/CHANGE NOR W4S2049/840719 (ECP W4S2067/841224)	870628
F	NOR W3S2075/R401105	840222
E	NOR W3S8001 79-01-10	790310
D	SEE ERR HQR 50605	10 FEB 75
C	(2) SEE ERR HQR 30687-2	29 JUN 7
B	SEE ERR HQR 20808	15 NOV
A	REDRAWN AND REVISED WAS "D" SIZE, SEE EO SA 26316	27NOV62
LTR	DESCRIPTION	DATE

REVISIONS

CURRENT DESIGN ACTIVITY CAGE CODE 19200
U.S. ARMY
ARMAMENT RESEARCH, DEVELOPMENT AND ENGINEERING CENTER
PICATINNY ARSENAL, NEW JERSEY 07806-5000

CAGE CODE 19205

PART NO. 6501828

PHYSICAL PROPERTIES			
YP		B12006313	PISTOL, M15
TS		F7791205	PISTOL, M9A1
EL %			NATL MATCH
RA		F7265655	PISTOL, M9A1
BH			
		DWG ASST	MISC DW
APPLICATION			
FILE HARD		DO NOT	APPLY PART NO.

UNLESS OTHERWISE SPECIFIED DIMENSIONS ARE IN INCHES
TOLERANCES ON DECIMALS ± .010
ANGLES ± 1°0' FRACTIONS ± 1/64
MATERIAL: SEE NOTE 6
HEAT TREATMENT SEE NOTE 3
FINAL PROTECTIVE FINISH: SEE NOTE 4

ORIGINAL DATE OF DRAWING 1 MAY 28
DRAFTSMAN E.L.F. CHECKER L.S.C.
TRACER CHECKER
ENGINEER
SUBMITTED
APPROVED BY ORDER OF THE CHIEF OF ORDNANCE
SCALE 4/1 UNIT WT. .07 LB

SAFETY, GRIP

DEPT OF TH
SPRINGFIELD
SPRINGFIELD

SIZE F 650
SHEET 1

RMH

NOTES:
1. FINISH 125 ALL OVER.
2. FOR IDENTIFICATION MARKINGS, SEE DRAWING D5503843.
3. STEEL CARBON SAE 1035, 1127; ASTM A576 OR ASTM A108.
4. MIL-W-12855 APPLIES.

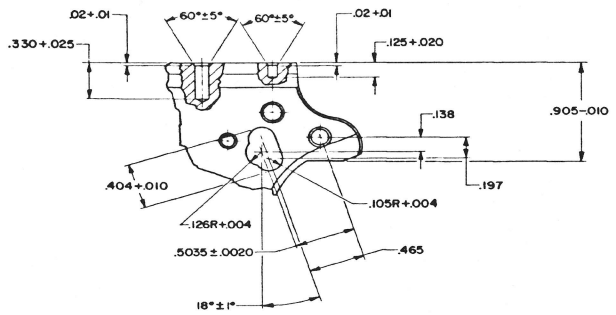

DETAIL L
SCALE 2/1

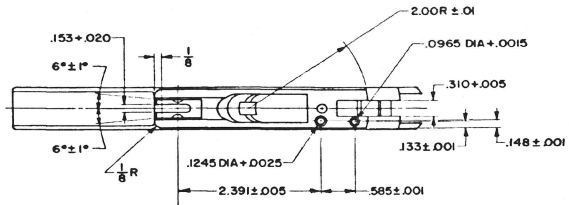

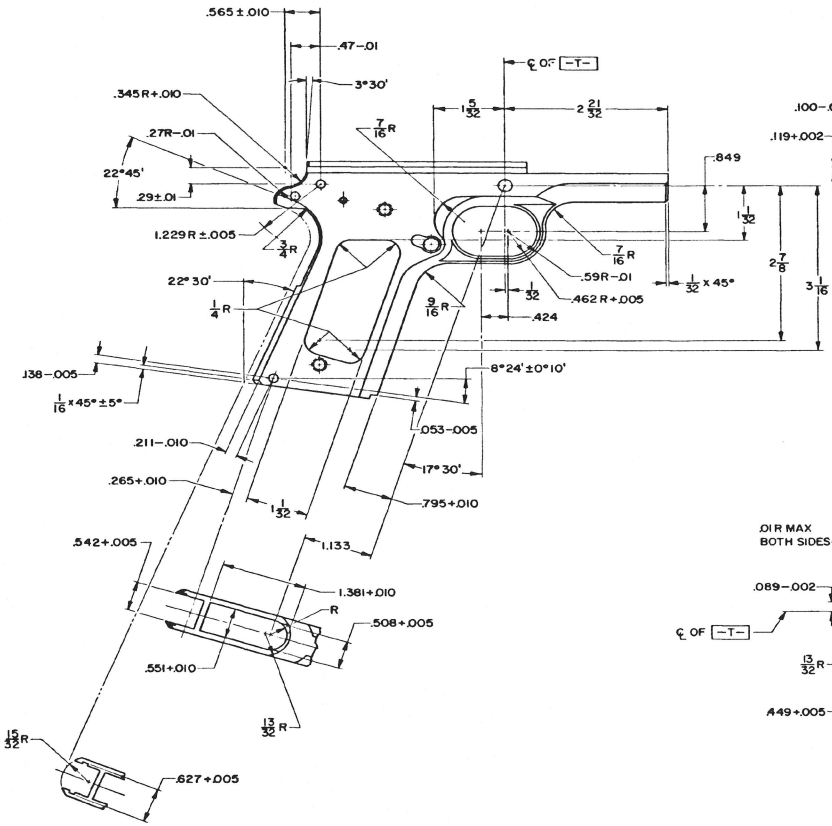

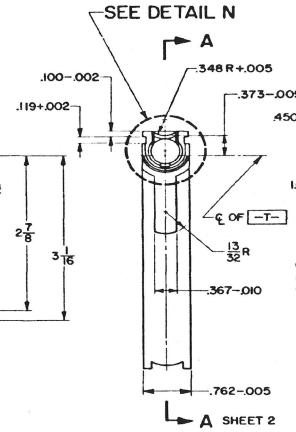

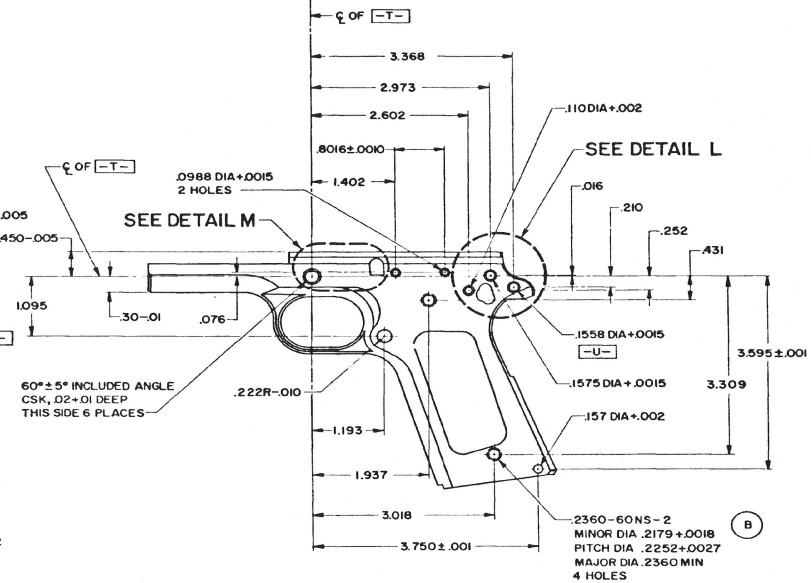

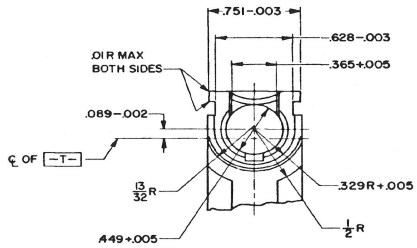

DETAIL N
SCALE 2/1

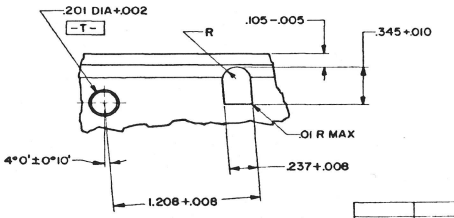

DETAIL M
SCALE 2/1

F			REDRAWN W/CHANGE NOR W452049/840719 (ECP W452067/841224)
E			NORW052002 810226
D			SEE ERR HQR 50605
C			(8) SEE ERR HQR 30687-1
B			SEE EO RIA-14073
A			REDRAWN AND REVISED
			WAS "D" SIZE, SEE EO SA 26316
20			
STK			DESCRIPTION

REVISIONS

	E	F
	SH 2	SH 1

REVISION STATUS OF SHEETS

CURRENT DESIGN ACTIVITY CAGE CODE 19200
U.S. ARMY
ARMAMENT RESEARCH, DEVELOPMENT AND ENGINEERING CENTER
PICATINNY ARSENAL, NEW JERSEY 07806-5000

CAGE CODE 19205 PART NO. 6535359

PHYSICAL PROPERTIES			
TP		C12006344	PISTOL, M15
TS			PISTOL, M9(A1)
EL %		C7790368	NATL MATCH
RA		D6508389	PISTOL, M9(A1)
BH		NEXT ASSY	USED ON
		APPLICATION	
BH		DO NOT	APPLY PART NO.

UNLESS OTHERWISE SPECIFIED DIMENSIONS ARE IN INCHES
TOLERANCES ON DECIMALS ± .002
ANGLES ± 0°30' FRACTIONS ± 1/64
MATERIAL SEE NOTE 3
HEAT TREATMENT
FINAL PROTECTIVE FINISH

ORIGINAL DATE OF DRAWING 15 JAN 36
DRAFTSMAN E.C.P. CHECKER E.C.P.
TRACED CHECKED
ENGRD
SUBMITTED
APPROVED BY ORDER OF THE CHIEF OF ORDNANCE
LT COL ORD CORPS

RECEIVER

DEPT OF ORDNANCE SPRINGFIELD

DWG SIZE F | 6

SCALE 1/1 | UNIT WT .70LB | RMH

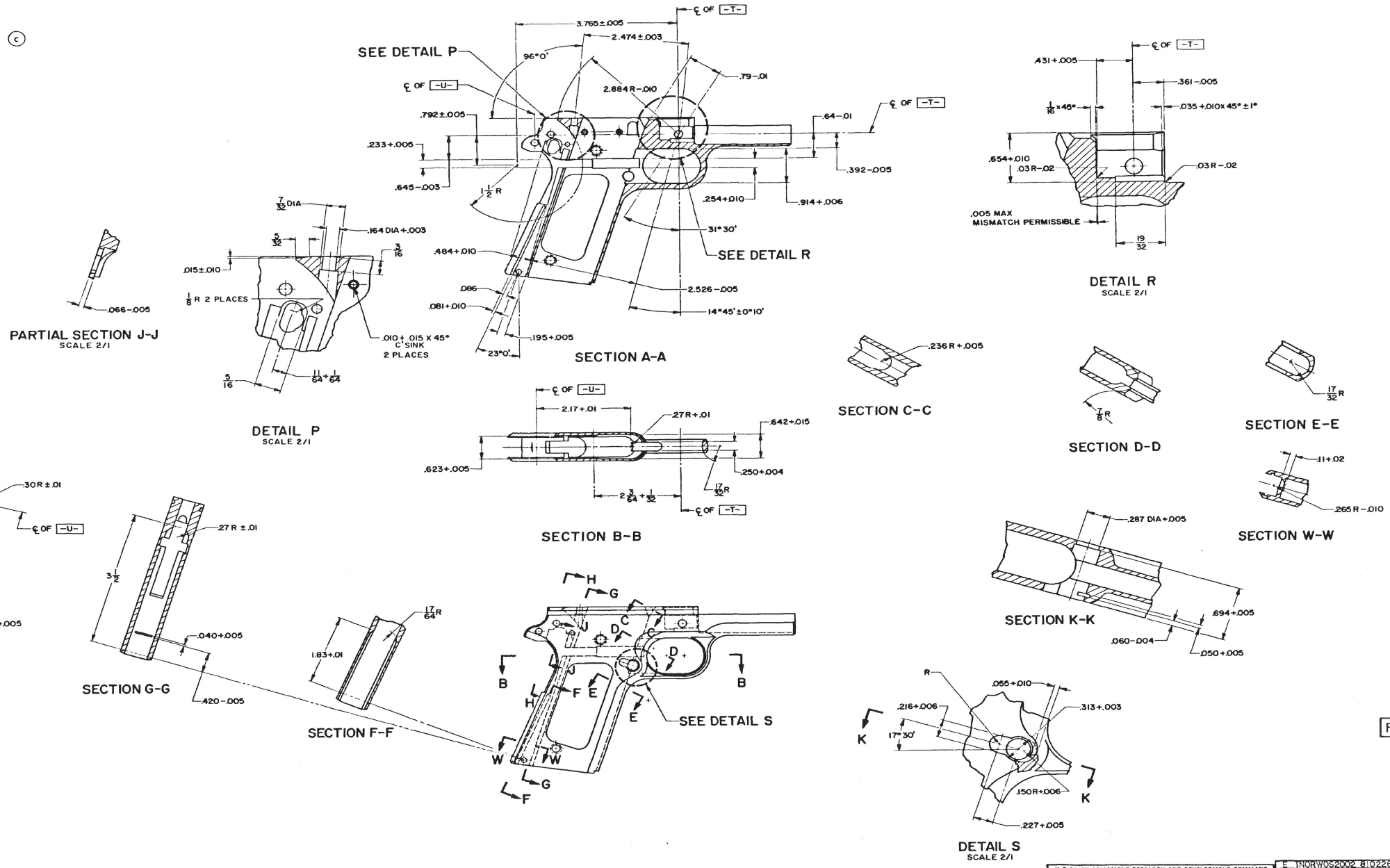

U S ARMY ARMAMENT RESEARCH AND DEVELOPMENT COMMAND
DOVER, NEW JERSEY 07801

CODE IDENT NO. 19200

CODE IDENT NO. ~~19204~~
PART NO. 6535359

E	NORWOS2002-810223
D	NO CHANGE
C	(8) SEE ERR HQR 30687
B	NOT USED
A	REDRAWN AND REVISED
	WAS "D" SIZE, SEE EO SA26
ZO	
SYM	DESCRIPTION

REVISIONS

PHYSICAL PROPERTIES	
TOLERANCES ON	DECIMALS ± .002 ANGLES ± 0° 30' FRACTIONS ± 1/64
MATERIAL	SEE SHEET 1
HEAT TREATMENT	
FINAL PROTECTIVE FINISH	
NEXT ASSY	USED ON
APPLICATION	DO NOT APPLY PART NO.
ORIGINAL DATE OF DRAWING	15 JAN 36
DRAFTSMAN	E.C.P.
TRACER	E.C.P.
ENGINEER	
SUBMITTED	
APPROVED BY ORDER OF THE CHIEF OF ORDNANCE	LT. COL. ORD CORPS
SCALE	1/1
UNIT WT	.70 LB
DWG SIZE	F

RECEIVER

RMH

DRAWING SIZE C
(ARRADCOMR 70-12)

REVISIONS			
SYM	DESCRIPTION	DATE	APPROVAL
2	← →	28 DEC 49	
A	REDRAWN AND REVISED SEE EO SA 26316	27 NOV 62	
B	1-2 SEE EO RIA 14141	4 21 67	
C	SEE ERR HQR 30687-1	23 MAY 73	
D	3 SEE ERR HQR 50631	5 MAY 75	
E	3 SEE NOR 76E00440003	2 AUG 76	
F	NOR W9S2004 79 02 21	79 03 07	
G	NORWOS2002 81-02-26	82-01-15	

NOTES:

1. FOR BASIC DESIGN SEE DRAWING B6147114.
2. HEAT TREATMENT: HEAT TOP END FOR DISTANCE [-B-] AT 1500° TO 1550° F; OIL QUENCH. TEMPER 20 MINUTES AT 700° F. HEAT TREATMENT METHOD IS FOR GUIDANCE EXCEPT THAT TEMPERING TIME SHALL NOT BE REDUCED BELOW THAT SPECIFIED.
3. THIS INFORMATION MAY BE INSCRIBED ON PART NO 7310043 PRIOR TO ASSEMBLY.
4. HARDNESS FOR DISTANCE [-B-] A71 TO A75.
5. PROCESS ADVISORY: FREE INSIDE OF TUBE OF OXIDE COLOR OR SCALE MATERIAL PRIOR TO WELDING.
6. DIMENSIONS REFER TO WELD NUGGET SIZE NOT TO ELECTRODE MARKS.
7. NOT LATER THAT ONE HOUR AFTER WELDING, STRESS RELIEVE AT 850° TO 900°F FOR ONE HOUR.
8. THE WELD SHALL BE SATISFACTORY IF A PEEL TEST CAUSES TEARING OF THE PARENT METAL AROUND THE PERIPHERY OF THE WELD. PEEL TEST MUST BE PERFORMED WITHIN 30 MINUTES OF WELDING, OR MAY BE PERFORMED AT ANYTIME AFTER STRESS RELIEF.
9. MIL-W-13855 APPLIES.

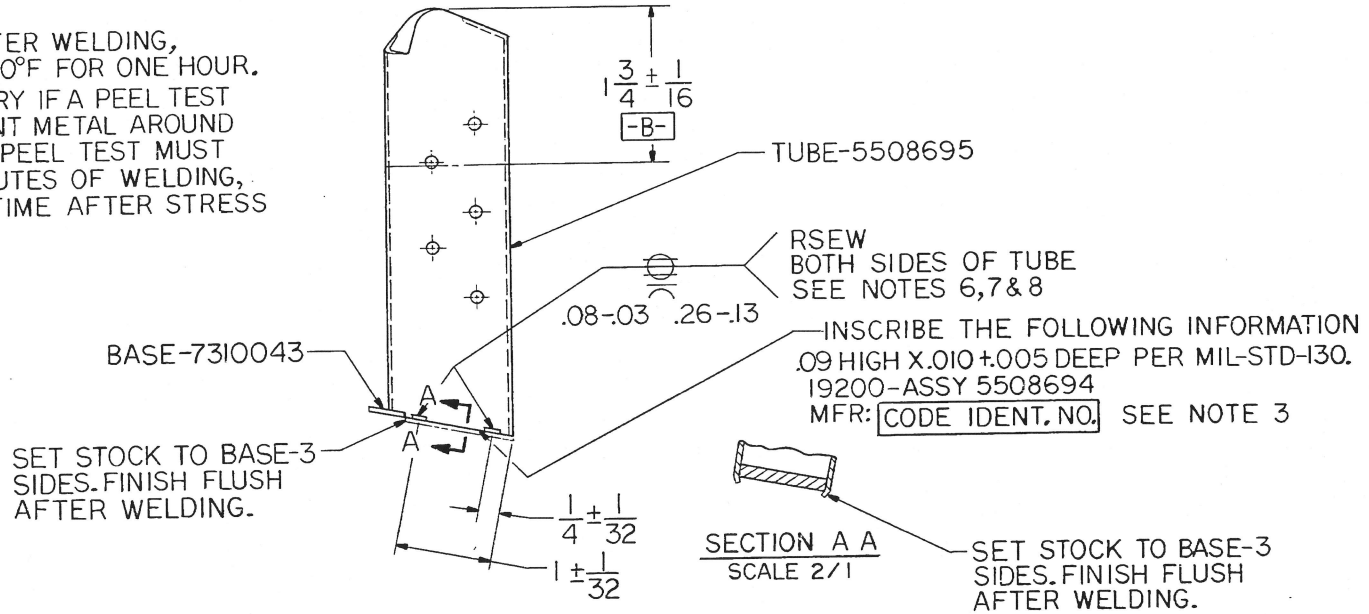

FOR LIST OF PARTS, SEE ENGINEERING PARTS LIST 7265559

PART NO. 7265559

	PISTOL, M191A1
	NATL MATCH
C5508694	PISTOL, M191A1
B12006352	PISTOL, M15
NEXT ASSY	USED ON
APPLICATION	

MECHANICAL PROPERTIES	
YP	
TS	
EL2	
RA	
BH	
RH	SEE NOTE 4

DO NOT SCALE DRAWING
UNLESS OTHERWISE SPECIFIED DIMENSIONS ARE IN INCHES
TOLERANCES ON DECIMALS ±.01
FRACTIONS ± ANGLES ±
HEAT TREATMENT SEE NOTE 2
FINAL PROTECTIVE FINISH: FINISH 3.3.1 OF MIL-STD-171 W/VV-L-800 SUPPLEMENTARY OIL TREATMENT

ORIGINAL DATE OF DRAWING 8 JAN 44

DRAFTSMAN	E.R.C	CHECKER	K.T.M
ENGR	E.J.S	ENGR	A.J.S
ENGR	H.E.S	ENGR	V.W.G

V. A. LUUKKONEN
LTC. SHALIN

U S ARMY ARMAMENT RESEARCH AND DEVELOPMENT COMMAND
DOVER, NEW JERSEY 07801

TUBE, MAGAZINE, ASSEMBLY

SIZE	CODE IDENT NO.	
C	19200	7265559
SCALE 1/1	UNIT WT. .12 LB	SHEET 1 OF 1

ARRADCOM FORM 67 AUG 77 REPLACES SARPA FORM 1040 OCT 75 WHICH MAY BE USED UNTIL EXHAUSTED

REVISIONS			
SYM	DESCRIPTION	DATE	APPROVAL
A	REDRAWN AND REVISED SEE EO SA26316	27 NOV 62	
B	(8) SEE ERR HQR 20800	3 NOV 72	
C	SEE ERR HQR 30687-2	19 JUN 73	
D	(3) SEE ERR HQR 50605	10 FEB 75	
E	NOR W8S8005 79 01 30	790921	
F	REDRAWN W/CHANGE NOR W4S2049/840719 (ECP W4S2067/841224) (ECP W4S2100/850213)	870621	
G	ERR Z9Z1288AG (ECP G8S2036 88 07 01)	901016	R WS
H	NOR G2S3017/920224	920326	GHS SR

NOTES:

1. FINISH 125 EXCEPT AS NOTED.
2. ALL EDGES SHALL BE BROKEN .005 MAX UNLESS OTHERWISE SPECIFIED.
3. UNLESS OTHERWISE SPECIFIED, ALL INTERIOR CORNERS SHALL BE ROUNDED WITH FILLET RADII OF FROM .005 TO .015 INCH.
4. MATERIAL:-
   A-STEEL, CARBON, SAE 1060 THRU 1080 ASTM A675 OR ASTM A108.
   B-STEEL, SAE 4150; ASTM A304, OR A331
   C-INVESTMENT CASTING 1C4140, SPEC MIL-S-22141.
5. UNLESS OTHERWISE SPECIFIED, SURFACE REQUIRING 32 AND FINER ROUGHNESS HEIGHT RATING MAY BE PROCESSED AFTER APPLICATION OF FINAL PROTECTIVE FINISH. BRIGHT AREAS RESULTING FROM SUCH PROCESSING ARE PERMISSIBLE. APPLY OIL PER MIL-L-3150 OR MIL-C-16173, GRADE 3 TO BRIGHT AREAS.
6. HEAT TREATMENT:-
   A-STEEL 1060 THRU 1080 AND 4150 HEAT AT 1540° TO 1580° IN A NEUTRAL ATMOSPHERE. QUENCH IN WELL AGITATED AUSTEMPERING SALT TO SPECIFIED HARDNESS. HEAT TREATMENT METHOD IS FOR GUIDANCE ONLY.
   B-INVESTMENT CASTING 4140 STEEL AUSTEMPER TO REQUIRED HARDNESS.
7. FINISH 5.3.1.2 OR 5.3.2.2 OF MIL-STD-171.
8. MIL-W-13855 APPLIES.
9. INSPECT CASTINGS PER MIL-STD-2175, CLASS I, GRADE A.

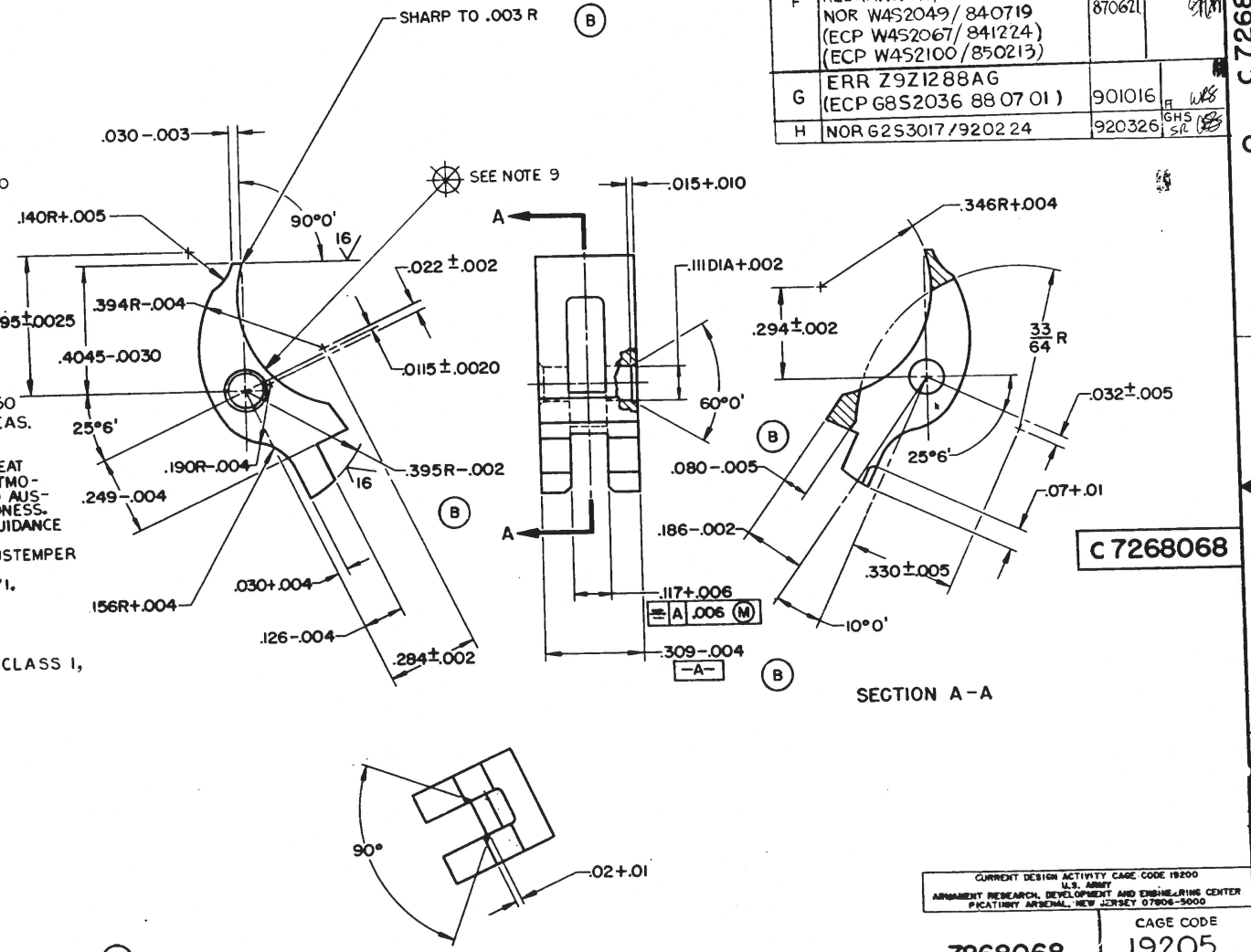

C 7268068

CURRENT DESIGN ACTIVITY CAGE CODE 19200
U.S. ARMY
ARMAMENT RESEARCH, DEVELOPMENT AND ENGINEERING CENTER
PICATINNY ARSENAL, NEW JERSEY 07806-5000

CAGE CODE 19205

PART NO. 7268068

PHYSICAL PROPERTIES	
TP	
TS	
EL %	
RA	
BH	
RH	C43 TO 50

F7791205	PISTOL M9A1
F7265655	NATL MATCH PISTOL M9A1
F12006306	PISTOL M15
NEXT ASSY	USED ON

APPLICATION

DO NOT APPLY PART NO.

UNLESS OTHERWISE SPECIFIED DIMENSIONS ARE IN INCHES
TOLERANCES ON DECIMALS ANGLES ±1°0' FRACTIONS ±1/64
MATERIAL: SEE NOTE 4
HEAT TREATMENT: SEE NOTE 6
FINIS. PROTECTIVE FINISH: SEE NOTE 7

ORIGINAL DATE OF DRAWING 15 DEC 55
DRAFTSMAN R.F.K. CHECKER H.E.S.
TRACER CHECKER
ENGINEER E.S.C. ENGR
SUBMITTED ORD CORPS
APPROVED BY ORDER OF THE CHIEF OF ORDNANCE LT COL ORD CORPS

SEAR

DEPT OF THE ARMY
SPRINGFIELD ARMORY
SPRINGFIELD ARMY

DWG SIZE C 7268068
SCALE 4/1 UNIT WT. .0063 LB
SHEET 1 OF 1

RMH

DISTRIBUTION STATEMENT A
APPROVED FOR PUBLIC RELEASE; DISTRIBUTION IS UNLIMITED.

DRAWING SIZE C
(ARRADCOMR 70-12)

REVISIONS			
SYM	DESCRIPTION	DATE	APPROVAL
I		19 MAY 49	
A	REDRAWN AND REVISED SEE EO SA 26316	27 NOV 62	
B	SEE EO RIA 14141	4-21-67	
C	SEE ERR HQR 30687-1	23 MAY 73	
D	(2) SEE ERR HQR 50631	5 MAY 75	
E	(1) SEE NOR 76E0044-0004	2 AUG 76	
F	NOR W9S2004 79-02-21	79-03-07	
G	NORWOS2002 81-02-26	82-01-15	
H	REDRAWN W/CHANGE NOR W4S2049/840719 (ECP W4S2067/841224)	870621	

NOTES:

1 - FINISH 125 EXCEPT SHEARED EDGES 250.

2 - MATERIAL STEEL, CARBON, ASTM A109.

3 - MIL-W-13855 APPLIES.

4 - THIS INFORMATION MAY BE INSCRIBED ON PART NO. 7265559 AT ASSEMBLY.

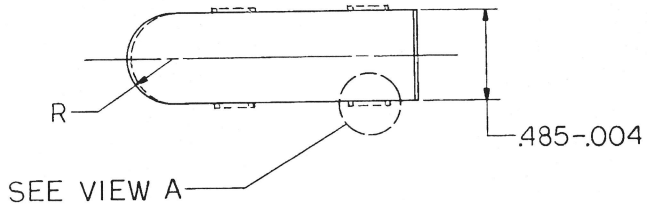

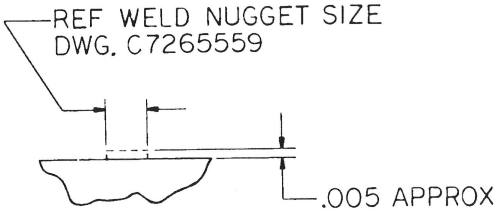

PROCESS ADVISORY:
SACRIFICAL WELDING
PROJECTION.

VIEW A

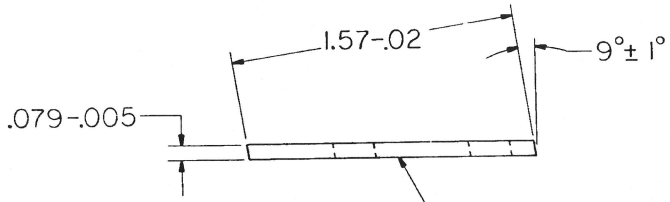

INSCRIBE THE FOLLOWING INFORMATION
.09 HIGH X .010 +.005 DEEP PER MIL-STD-130.
19200 - ASSY 5508694
MFR: [CODE IDENT NO.]
(SEE NOTE 4)

CURRENT DESIGN ACTIVITY CAGE CODE 19200
U.S. ARMY
ARMAMENT RESEARCH, DEVELOPMENT AND ENGINEERING CENTER
PICATINNY ARSENAL, NEW JERSEY 07806-5000

PART NO. 7310043

		MECHANICAL PROPERTIES	
	PISTOL	YP	
	M911A1	TS	
	NATL MATCH	EL2	
B 7265559	PISTOL	RA	
	M911A1	BH	
NEXT ASSY	USED ON	RH	
APPLICATION			

DO NOT SCALE DRAWING
UNLESS OTHERWISE SPECIFIED DIMENSIONS ARE IN INCHES
TOLERANCES ON DECIMALS ±.01
FRACTIONS ± ANGLES ±
MATERIAL: SEE NOTE 2

ORIGINAL DATE OF DRAWING 8 JAN 44
DRAFTSMAN R.C.H CHECKER K.T.G
ENGR E.J.S ENGR A.J.S
ENGR H.E.S ENGR V.W.G
V.A. LUUKKONEN
LTC. SHALIN

DEPT OF THE ARMY
SPRINGFIELD ARMORY, SPRINGFIELD, MASS

BASE, MAGAZINE

SIZE C | CAGE CODE 19205 | 7310043
SCALE 2/1 | UNIT WT. | SHEET 1 OF 1

ARRADCOM FORM 67 AUG 77 REPLACES SARPA FORM 1040 OCT 75 WHICH MAY BE USED UNTIL EXHAUSTED

NOTES:

1. FINISH 125√ EXCEPT AS NOTED.

2. MATERIAL:
   A. STEEL: CONP 8650, 4140, (GUN QUALITY). AUSTENITIC GRAIN SIZE NO. 5 OR FINER, ASTM-A322, A331, MACROSTRUCTURE QUALITY SHALL BE S2, R2, C2 OR BETTER AS PER ASTM-E381.
   B. INVESTMENT CASTING: IC8640 OR IC4140 CLASS 1, GRADE A AND B PER SPECS MIL-S-22141 AND MIL-C-6021.

3. HEAT TREATMENT:
   A. HEAT AT 1540° TO 1580° F. OIL QUENCH. TEMPER TO HARDNESS SPECIFIED (ZONES B5 AND D1). MICROSTRUCTURE SHALL BE A MINIMUM OF 90° MARTENSITE.* OR
   B. HEAT AT 1540° TO 1580°F. QUENCH INTO AUSTEMPERING BATH AT 650°F - 675°F. HOLD FOR 30 MINUTES. COOL. TEMPER AT 400°F FOR ONE HOUR. HARDNESS REQUIREMENTS AS SPECIFIED (ZONE B5 AND D1). HEAT TREATMENT SHALL BE UNIFORMLY APPLIED TO PROVIDE A MICROSTRUCTURE OF 90° BAINITE.

   HEAT TREATMENT METHODS ARE FOR GUIDANCE ONLY, EXCEPT THAT TEMPERING TIME SHALL NOT BE REDUCED BELOW THAT SPECIFIED.*

4. FOR IDENTIFICATION MARKINGS SEE DWG C5503845.

5. MIL-M-13855 AND ANSI Y14.5M-1982 APPLIES

6. THE SLIDE SHALL SHOW NO EVIDENCE OF CRACKS, SEAMS OR OTHER INJURIOUS DEFECTS AS DETERMINED BY MAGNETIC PARTICLE INSPECTION IN ACCORDANCE WITH MIL-I-6868.

   USE AC OR DC TYPE MAGNETIZATION, 700-800 AMPERES, WET METHOD OF PARTICLE APPLICATION, AND EITHER WET VISIBLE OR WET FLUORESCENT TYPE OF PARTICLE. APPLY MAGNETIC PARTICLE INSPECTION MARK "M" TO SLIDES MEETING THIS REQUIREMENT.

REVISIONS			
SYM	DESCRIPTION	DATE	APPROVAL
B	(1) REPLACE REV A WITH CHANGES, SEE EO NO. SA27185	16 DEC 64	
C	SEE EO NO. R1A-13999	1-9-67	
D	SEE EO 82134	24 MAY 68	
E	SEE ERR HQR 30687-1	23 MAY 73	
F	NORWOS2002 81-02-26	82-01-15	
G	NOR WIS 2016/82-01-23	83-06-27	
H	NOR WIS 3161/82-01-06 (ECP W2S3266/83-01-11)	83-08-08	
J	NORW4S2011/84-04-13	840720	
K	NOR W4S2062 840919	85 08 21	
L	NOR W4S2049 840719 (ECP W5S2039/850604)	870621	
M	NORW6S0027/860310	901017	
N	NOR G9S2102/891128	910327	
P	NCR G4S3016/940302	940428	
R	NOR G4S3055/940517	940720	
T	NOR G4S3070 940614	940929	

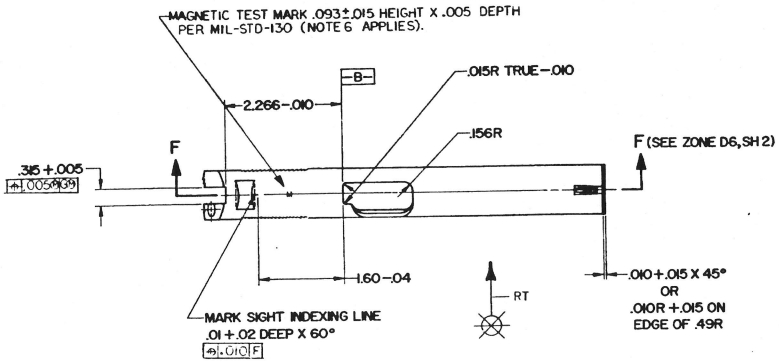

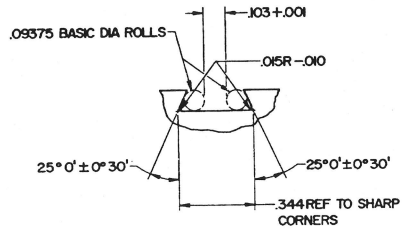

VIEW C
(SEE ZONE C6, SH 1)
SCALE 4/1

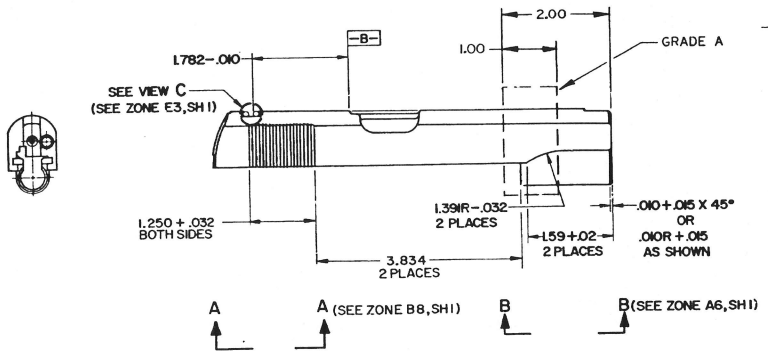

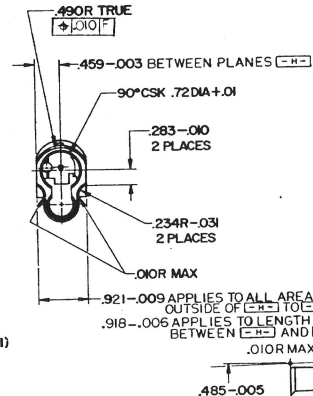

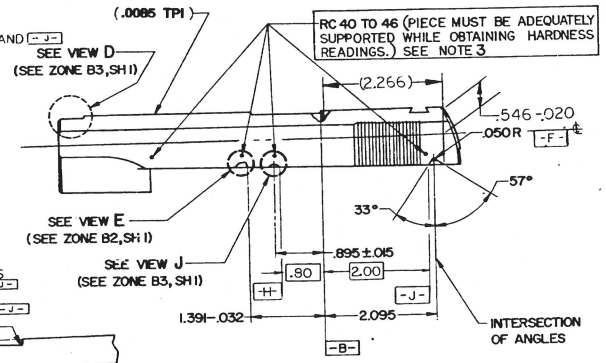

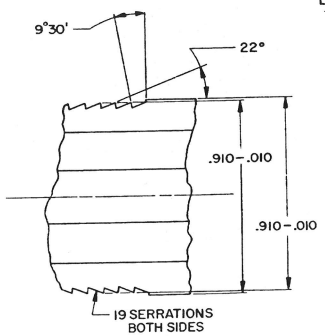

SERRATION EDGES BROKEN .003 TO .010 AND COMPLETELY DEBURRED

VIEW A-A
(SEE ZONE C6, SH 1)
SCALE 4/1

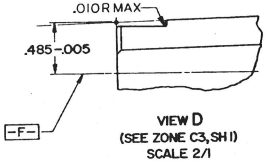

VIEW D
(SEE ZONE C3, SH 1)
SCALE 2/1

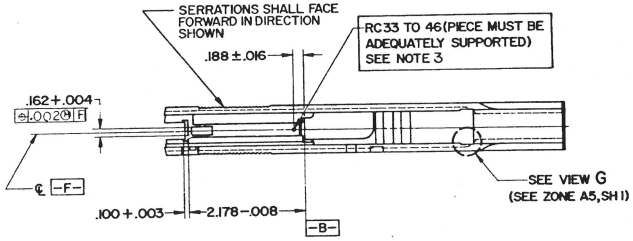

VIEW J
(SEE ZONE C2, SH 1)
SCALE 4/1

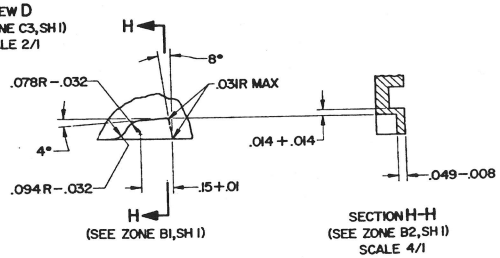

(SEE ZONE B1, SH 1)

VIEW E
(SEE ZONE C2, SH 1)
SCALE 4/1

SECTION H-H
(SEE ZONE B2, SH 1)
SCALE 4/1

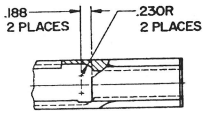

VIEW B-B
(SEE ZONE C5, SH 1)

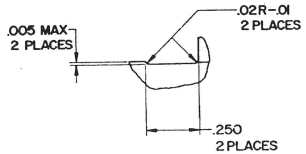

VIEW G
(SEE ZONE B5, SH 1)
SCALE 4/1

	T	T
	SH 2	SH 1
REVISION STATUS OF SHEETS		

DISTRIBUTION STATEMENT A.
APPROVED FOR PUBLIC RELEASE;
DISTRIBUTION IS UNLIMITED.

CURRENT DESIGN ACTIVITY CAGE CODE 19205
U.S. ARMY
ARMAMENT RESEARCH, DEVELOPMENT AND ENGINEERING CENTER
PICATINNY ARSENAL, NEW JERSEY 07806-5000

MECHANICAL PROPERTIES				
YP				
TS				
EL 2				
RA				
BH				
RH				

C7790353	PISTOL, M911A1
D12006341	PISTOL, M15
NEXT ASSY	USED ON
APPLICATION	
DO	APPLY PART NO SEE NOTE 5 AS SPECIFIED

UNLESS OTHERWISE SPECIFIED DIMENSIONS ARE IN INCHES
TOLERANCES ON DECIMALS ±.010
FRACTIONS ± ANGLES ± 1°
MATERIAL SEE NOTE 2
HEAT TREATMENT SEE NOTE 3
FINAL PROTECTIVE FINISH

ORIGINAL DATE OF DRAWING 11 MAR 60
DRAFTSMAN H.E.S CHECKER
TRACER CHECKER
ENGINEER H.E. Sibley ENGINEER
SUBMITTED
APPROVED

PART NO. 7790314
DEPT OF THE ARMY
SPRINGFIELD ARMORY, SPRINGFIELD, MASS.

SLIDE

CAGE CODE	DWG SIZE	
19205	F	7790314
SCALE 1/1	UNIT WT .76 LB	SHEET 1 OF 2

SWESP 1179-1
28 AUG 62

M	NORW650027/860310	901017		
N	NORG9S2102/891128	910327	GHS SR	
P	NORG4S3016/940302	940428	PE EC	
R	NORG4S3055/940517	940720	CVS SR	
T	NOR G4S3070 940614	940929	RR	

REVISIONS

SYM	DESCRIPTION	DATE	APPROVAL
B	(1) REPLACES REV A WITH CHANGES SEE EO NO. SA 27785	16 DEC 64	
C	SEE EO NO. RIA-13899	1-9-67	
D	(1-2) SEE EO 82134	24 MAY 68	
E	SEE ERR HQR 30687-1	23 MAY 73	
F	NORW0S2002 81-02-26	82-01-15	
H	NORW1S3161/82-01-06 (ECP W2S3263/83-01-11) (ECP W2S3264/83-01-11) (ECP W2S3267/83-01-11) (ECP W2S3261/83-01-11)	83-08-08	
K	NOR W4S2062 840919	850821	
L	REDRAWN W/CHANGE NOR W4S2049/840719 (ECP W5S2039/850604)	870621	

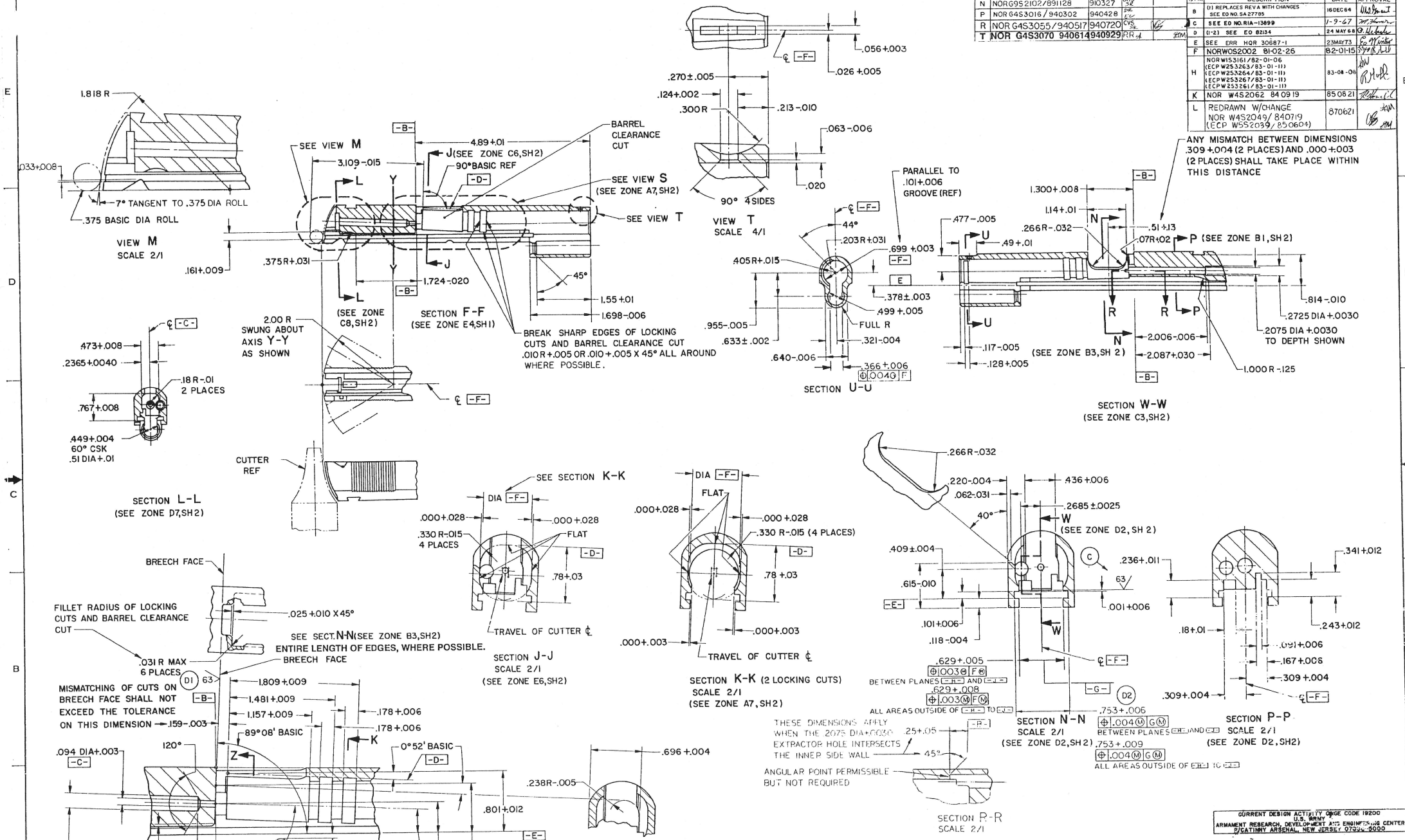

DISTRIBUTION STATEMENT A.
APPROVED FOR PUBLIC RELEASE;
DISTRIBUTION IS UNLIMITED.

CURRENT DESIGN ACTIVITY CAGE CODE 19200
U.S. ARMY
ARMAMENT RESEARCH, DEVELOPMENT AND ENGINEERING CENTER
PICATINNY ARSENAL, NEW JERSEY 07806-5000

PART NO. 7790314

MECHANICAL PROPERTIES	
YP	
TS	
EL 2	
RA	
BH	
RH	

FIRING RECORDS
NEXT ASSY | USED ON
APPLICATION
DO NOT APPLY PART NO
SEE SHEET 1
DO AS SPECIFIED

UNLESS OTHERWISE SPECIFIED DIMENSIONS ARE IN INCHES
TOLERANCES ON DECIMALS ±.010
FRACTIONS ± ANGLES ± 1°
MATERIAL: SEE SHEET 1
HEAT TREATMENT: SEE SHEET 1
FINAL PROTECTIVE FINISH

ORIGINAL DATE OF DRAWING 11 MAR 60
DRAFTSMAN H.E.S
CHECKER
TRACER
CHECKER
ENGINEER
ENGINEER
SUBMITTED
APPROVED

DEPT OF THE ARMY
SPRINGFIELD ARMORY, SPRINGFIELD, MASS

SLIDE

CAGE CODE	DWG SIZE	
19205	F	7790314
SCALE 1/1	UNIT WT .76 LB	SHEET 2

SWESP 1179-1
28 AUG 62

REVISIONS			
SYM	DESCRIPTION	DATE	APPROVAL
16		6 JAN 59	
A	REDRAWN AND REVISED WAS "A" SIZE, SEE EO SA 26316	27 NOV 62	
B	(5) SEE ERR HQR 30687-1	23 MAY 73	
C	REDRAWN W/ CHANGE NOR W4S2049/840719 (ECP W4S2067/841224)	870[illegible]	
D	ERR Z9Z12687BF ECP W6S2049 861015	8[illegible]07	

C7790349

NOTES:

1. FINAL PROTECTIVE FINISH: FINISH 29.7 OF MIL-STD-171.

2. MIL-W-13855 APPLIES.

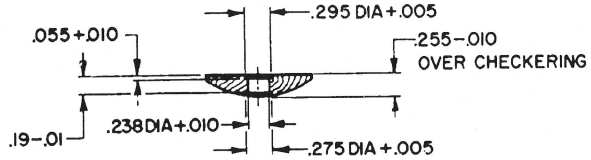

SECTION A-A

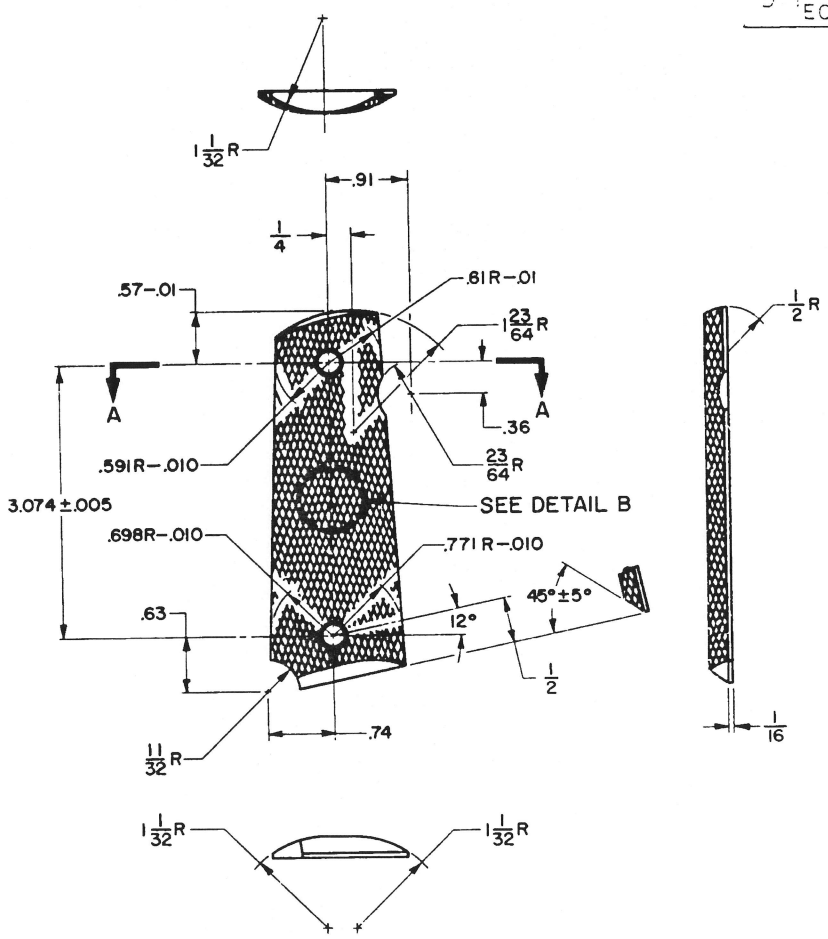

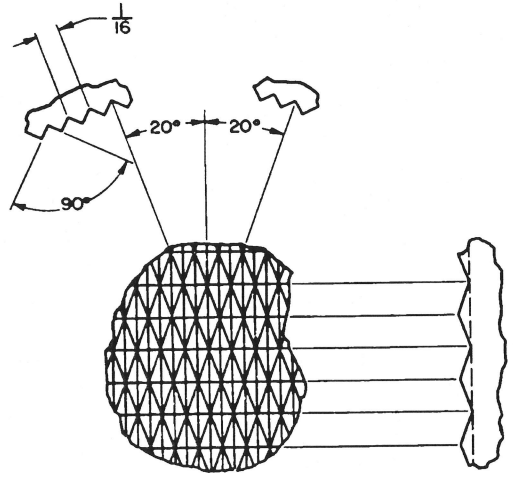

DETAIL B
SCALE 4/1

C7790349

CURRENT DESIGN ACTIVITY CAGE CODE 19205
U.S. ARMY
ARMAMENT RESEARCH, DEVELOPMENT AND ENGINEERING CENTER
PICATINNY ARSENAL, NEW JERSEY 07806-5000

CAGE CODE 19205

PART NO. 7790349

PHYSICAL PROPERTIES			
YP		B12006330	PISTOL M15
TS		F7791205	PISTOL M19A1
EL %			NATL MATCH
RA			
BH		NEXT ASSY	USED ON
		APPLICATION	
RH		DO NOT	APPLY PART NO

UNLESS OTHERWISE SPECIFIED DIMENSIONS ARE IN INCHES
TOLERANCES ON DECIMALS ± .01
ANGLES ± 1° FRACTIONS ± 1/64
MATERIAL: WOOD, SPEC MIL-W-13871: BLACK WALNUT (TYPE I)
HEAT TREATMENT
FINAL PROTECTIVE FINISH SEE NOTE 1

ORIGINAL DATE OF DRAWING 15 JAN 36
DRAFTSMAN S.J.B. CHECKER J.F.O.B.
TRACER CHECKER
ENGINEER ENGINEER
SUBMITTED ORD CORPS
APPROVED BY ORDER OF THE CHIEF OF ORDNANCE: LT COL ORD CORPS

STOCK, RIGHT HAND, WOOD

DEPT OF THE ARMY
SPRINGFIELD ARMORY
SPRINGFIELD MASS

SCALE 1/1 UNIT WT .05 LB

CWO SIZE C 7790349 SHEET

RMH

CO FORM 1177
8 AUG 48

REVISIONS			
SYM	DESCRIPTION	DATE	APPROVAL
16		6 JAN 59	
A	REDRAWN AND REVISED WAS "A" SIZE, SEE EO SA 26316	27NOV62	
B	(5) SEE ERR HQR 30687-1	23MAY73	
C	REDRAWN W/CHANGE NOR W4S2049 / 840719 (ECP W4S2067 / 841224)	870621	
D	ERR Z9Z1287BF ECP W6S2049 86'0'15	90'0'7	

C7790350

NOTES:

1. FINAL PROTECTIVE FINISH: FINISH 29.7 OF MIL-STD-171.

2. MIL-W-13855 APPLIES.

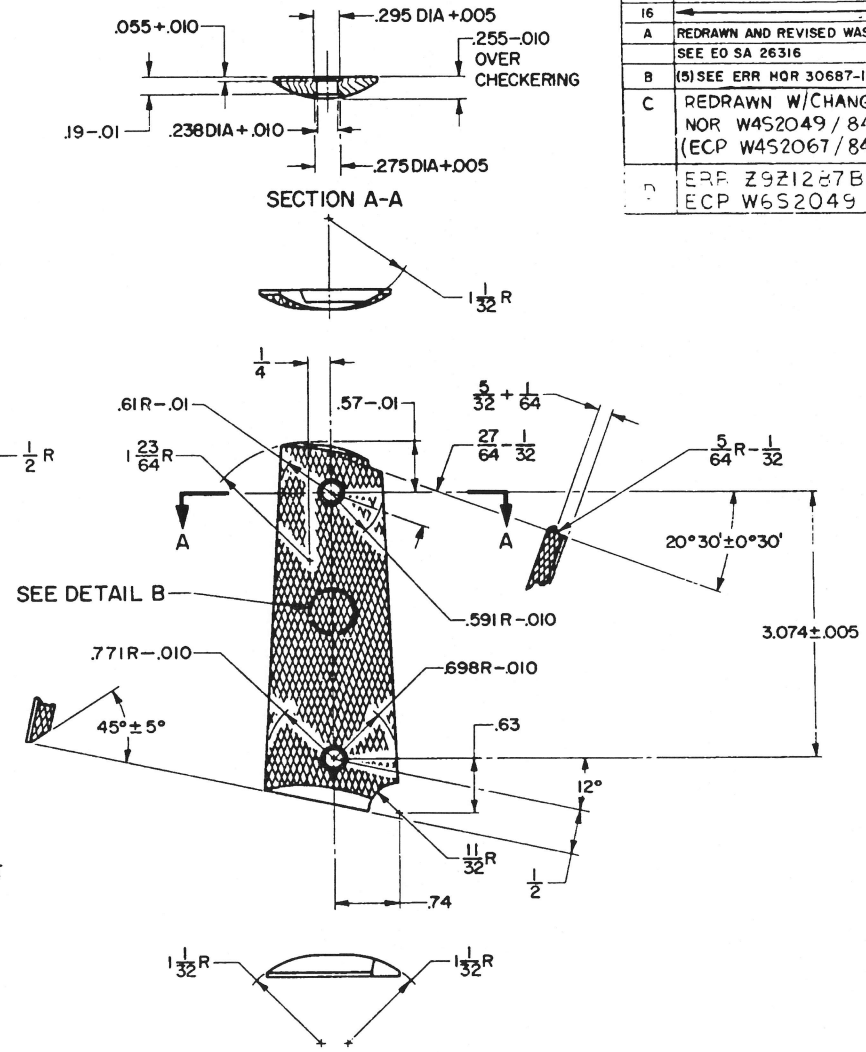

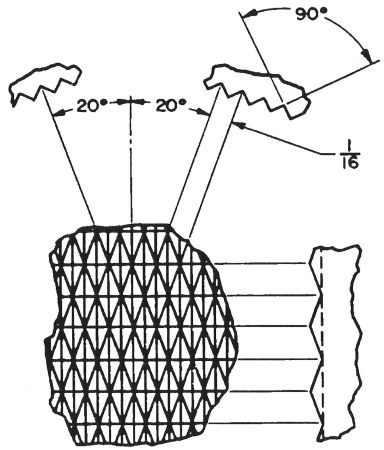

DETAIL B
SCALE 4/1

C7790350

CURRENT DESIGN ACTIVITY CAGE CODE 19200
U.S. ARMY
ARMAMENT RESEARCH, DEVELOPMENT AND ENGINEERING CENTER
PICATINNY ARSENAL, NEW JERSEY 07806-5000

CAGE CODE 19205

PART NO. 7790350

PHYSICAL PROPERTIES			
YP		B12006327	PISTOL, M15
TS		F7791205	PISTOL, M9A1 NATL MATCH
EL 2			
RA			
		NEXT ASSY	USED ON
RH		APPLICATION	
		DO NOT	APPLY PART NO.

UNLESS OTHERWISE SPECIFIED DIMENSIONS ARE IN INCHES
TOLERANCES ON DECIMALS ± .01
ANGLES ± 1° FRACTIONS ± 1/64
MATERIAL: WOOD, SPEC MIL-W-13871: BLACK WALNUT (TYPE I)
HEAT TREATMENT
FINAL PROTECTIVE FINISH
SEE NOTE 1

ORIGINAL DATE OF DRAWING 15 JAN 36
DRAFTSMAN C.C.I. CHECKER J.F.O.B.
TRACER CHECKER
ENGINEER ENGINEER
SUBMITTED ORD CORPS
APPROVED BY ORDER OF THE CHIEF OF ORDNANCE LT COL ORD CORPS

STOCK, LEFT HAND, WOOD

SCALE 1/1 UNIT WT .03LB

DEPT OF THE ARMY
SPRINGFIELD ARMORY
SPRINGFIELD MASS

DWG SIZE C 7790350
SHEET 1 OF

RMH

LITHO IN U.S.A. NE BLUE 135 ARMWRIGHT

NOTICE: Unless Superseded, Cancelled, Modified, or Other Data Affected by the Subject Item Has Been Changed and a Revised Drawing Prepared, Drawings Are Valid Only Under Contract Having Which Was Issued Prior to Date of Subject Item. Use of Drawings Superseded, Cancelled, or Other Data Affected by Subject Item Without Approval of the Cognizant Engineering Activity Is Prohibited. Any Changes Made to Drawings Under Contract Must Have Been Approved by Cognizant Engineering Activity Prior to Incorporation in Manufacture, Use or Sale of Subject Item, or Contractor Is Responsible for Any Resultant Liability.

D5

NOTES:

1. FINISH 125 FOR DISTANCE -B-
   REMAINING EDGES 250
2. HEAT TREATMENT: FOR DISTANCE -A- ONLY: HEAT AT 1520° TO 1570°F. OIL QUENCH. TEMPER TO SPECIFIED HARDNESS. HEAT TREATMENT METHOD IS FOR GUIDANCE.
3. AFTER SPOT WELDING AND HEAT TREATING, THE ENTIRE BOW FOR DISTANCE -B- SHALL BE CAPABLE OF ENTERING A SPACE .233 MIN IN HEIGHT WITHOUT BINDING.
4. WELD IN ACCORDANCE WITH SPEC MIL-W-12332. D3
5. MIL-W-13855 APPLIES. F

REVISIONS			
SYM	DESCRIPTION	DATE	APPROVAL
B		21JUL61	
C	REDRAWN AND REVISED SEE EO NO. SA26431	10AUG62	
D	(1-6) SEE EO 82043	8 MAR63	
E	(1-3) SEE EO HRD 92148	14AUG63	
F	(1-3) SEE ERR HQR 30687	8MAY73	
G	REDRAWN W/CHANGE NOR W4S2049/840719 (ECP W4S2067/841224) (ECP W5S2113/860123)	870621	
H	NOR G8S3105 881014	901011	

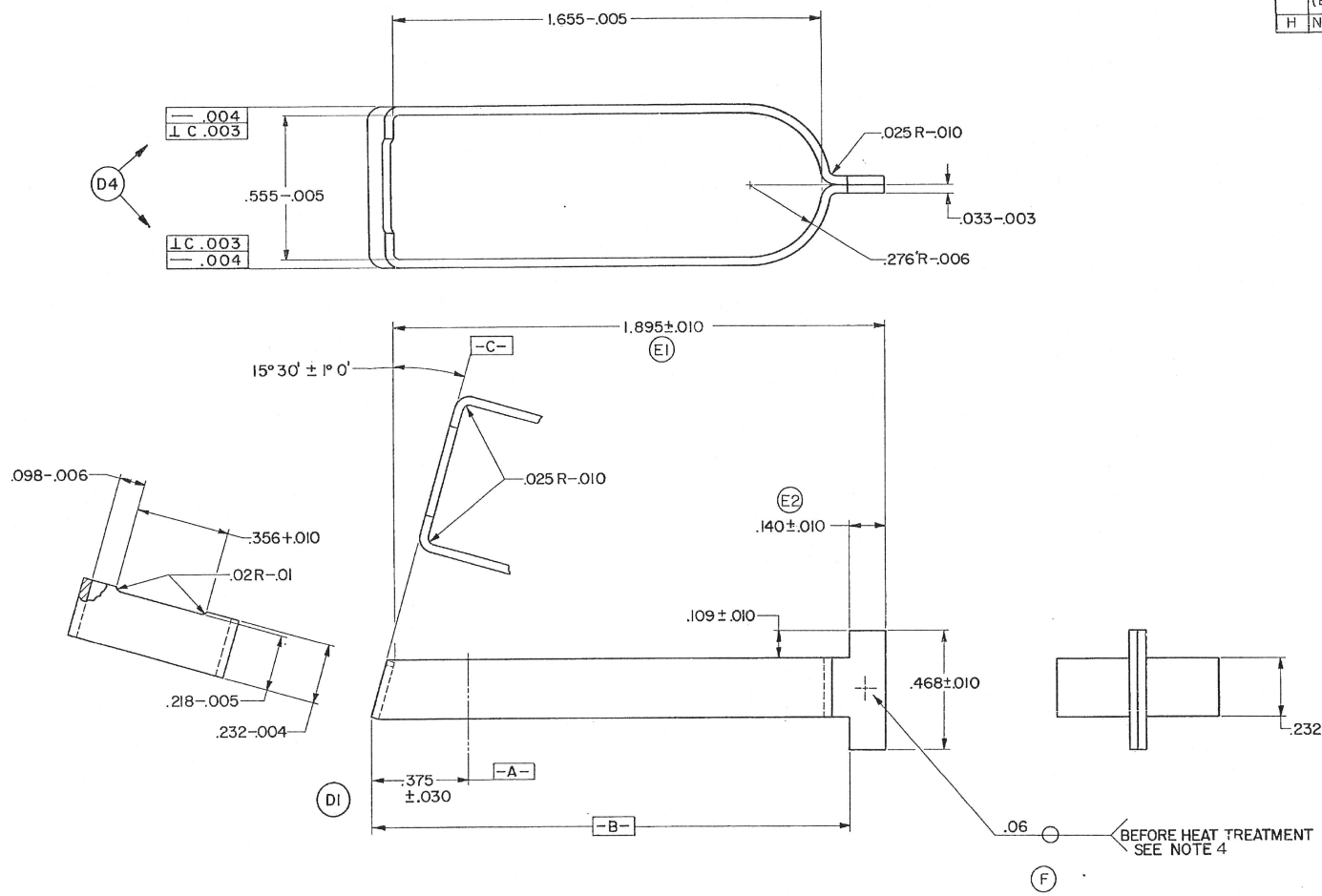

D779036

CURRENT DESIGN ACTIVITY CAGE CODE 19200
U.S. ARMY
ARMAMENT RESEARCH, DEVELOPMENT AND ENGINEERING CE
PICATINNY ARSENAL, NEW JERSEY 07806-5000

F D6 E3

		PHYSICAL PROPERTIES	
	PISTOL, M15	YP	
	.45 AP, M911A1	TS	
D7791067	NATIONAL	EL2	
D7791068	MATCH	RA	
		BH	
NEXT ASSY	USED ON		
APPLICATION		RH	C46 TO 50
DO NOT ~~DO~~	APPLY PART NO. ~~AS SPECIFIED~~		

UNLESS OTHERWISE SPECIFIED
DIMENSIONS ARE IN INCHES
TOLERANCES ON FRACTIONS DECIMALS ANGLES
MATERIAL: STEEL, SPEC QQ-S-700 SAE 1045,1050
HEAT TREATMENT: SEE NOTE 2
FINAL PROTECTIVE FINISH

ORIGINAL DATE OF DRAWING 6 JAN 59
DRAFTSMAN HES CHECKER R.D.
TRACER R.D.P. CHECKER J.J.S.
ENGR H.E. Sibley CHIEF ENGR
SUBMITTED N.W. Grant ORD CORPS
APPROVED BY ORDER OF THE CHIEF OF ORDNANCE H.J. Lynch ORD CORPS

BOW, TRIGGER

PART NO. 7790366

CAGE CODE 19205

DEPT OF THE ARMY
SPRINGFIELD ARMO
SPRINGFIELD, MAS

DWG SIZE D 779036 SHEET 1 OF

SCALE 4/1 UNIT WT .01 LB

RMH

REVISIONS			
SYM	DESCRIPTION	DATE	APPROVAL
A	SEE EO NO. SA 26257	28JUL61	
B	SEE ERR HQR 10755	28JUN71	
C	(3) SEE ERR HQR 30687	8MAY73	
D	(1) SEE ERR HQR 80605	10FEB75	
E	REDRAWN W/CHANGE NOR W4S2049/840719 (ECP W5S2113/860123	870621	

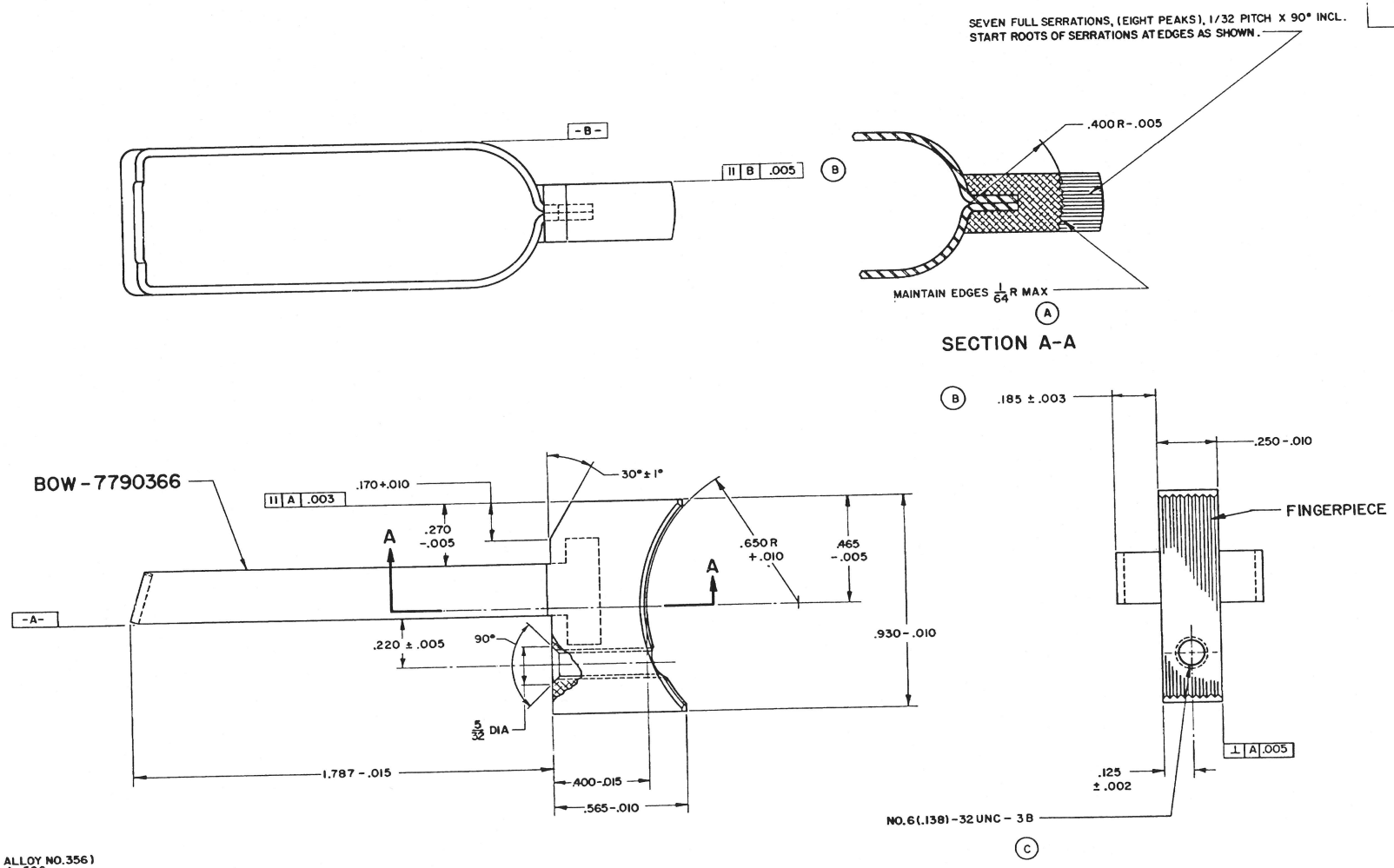

D7791067

NOTES:

1. CASTING: CLASS 8 (ALUMINUM ALLOY NO.356) IN ACCORANCE WITH SPEC QQ-A-596.
2. CAST WITH BOW 7790366 IN PLACE, AS SHOWN, USING INVESTMENT CASTING METHOD.
3. CORNERS AND EDGES MAY BE BROKEN TO .015 MAX EXCEPT AS NOTED.
4. INVESTMENT SHOULD BE WELL VENTILATED AND BE BAKED-OUT AT 900°F FOR 20 HOURS TO MINIMIZE SCALING AND TEMPERING OF BOW. RESIDUAL HARDNESS OF BOW AFTER CASTING SHALL NOT BE LESS THAN Rc25 ON END OPPOSITE FINGER PIECE. INFORMATION IN THIS NOTE IS BASED ON EXPERIENCE AND IS FOR GUIDANCE THE HARDNESS REQUIREMENT IS MANDATORY. A C
5. MIL-W-13855 APPLIES.

C D

FOR LIST OF PARTS SEE ENGINEERING PARTS LIST 7791067 A

PART NO. 7791067

PHYSICAL PROPERTIES			
YP		C7791047	PISTOL: M191IA1 NM
TS			
EL 2		812006346	PISTOL, M15
RA			
BH		NEXT ASSY	USED ON
		APPLICATION	
BH		DO NOT	APPLY PART NO.

TOLERANCES ON DECIMALS ANGLES FRACTIONS

MATERIAL SEE NOTE 1

HEAT TREATMENT NONE

FINAL PROTECTIVE FINISH SEE NOTE 5

ORIGINAL DATE OF DRAWING 10 NOV 60

DRAFTSMAN AWG CHECKER WLC 5
TRACER AWG CHECKER RCK
ENGINEER SLB 2 CHIEF ENGR RCA
SUBMITTED
APPROVED BY ORDER OF THE CHIEF OF ORDNANCE ORD CORPS

TRIGGER, LONG

SCALE 4/1 UNIT WT

CURRENT DESIGN ACTIVITY CAGE CODE 19200
U.S. ARMY
ARMAMENT RESEARCH, DEVELOPMENT AND ENGINEERING CENT
PICATINNY ARSENAL, NEW JERSEY 07806-5000

CAGE CODE 19205

DEPT OF THE ARMY
SPRINGFIELD ARM
SPRINGFIELD, MAS

DWG SIZE D 7791067

SHEET 1 OF 1

REVISIONS					
ME	ZONE	LTR	DESCRIPTION	DATE	APPROVED
		A	REPLACES REV— WITH CHANGE SEE ERR HQR 30687	8 MAY 73	E. Winter

NOTES:

1. MAKE FROM PART MS51965-116, △1 ALTER AS SHOWN.

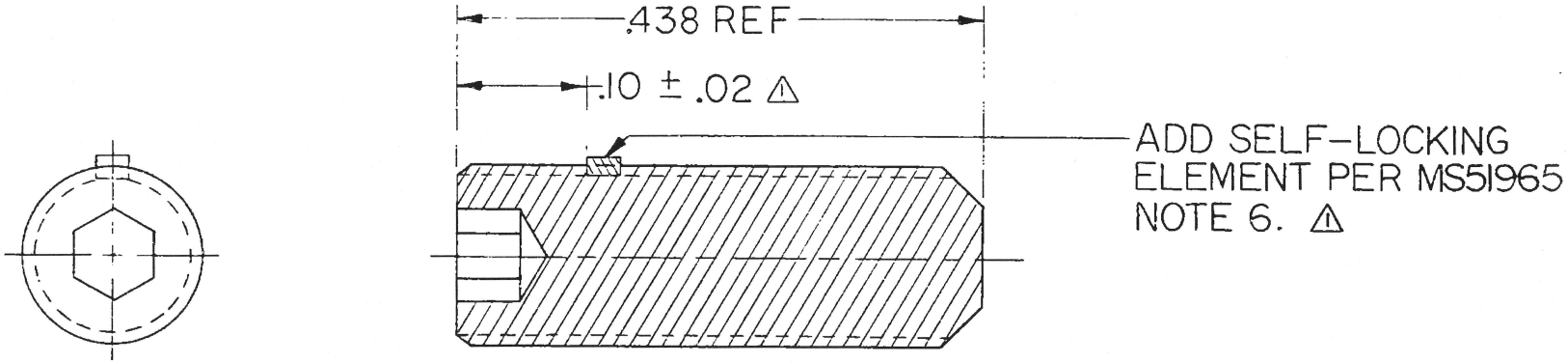

ALTERED ITEM DRAWING

PART NO. 7791069

MECHANICAL PROPERTIES			
YS MIN			
YS MAX			
EL 2		C7791047	PISTOL, M1911A1 NM
RA		B12006345	PISTOL, M15
BH		NEXT ASSY	USED ON
RH		APPLICATION	

UNLESS OTHERWISE SPECIFIED DIMENSIONS ARE IN INCHES
TOLERANCES:
ANGLES ± —
3 PLACE DECIMALS ± —
2 PLACE DECIMALS ± —

MATERIAL —

FINAL PROTECTIVE FINISH —

CONTRACT NO
DATE 8 MAY 73
PREP K
CHK R. V. DeLaurent
ENGR E. Winter
SUBMITTED E. Winter
APPROVED R. J. Henry

DEPT OF THE ARMY
U.S. ARMY WEAPONS COMMAND
ROCK ISLAND, ILLINOIS, 61201

SCREW, SET, SOCKET HEAD, FLAT POINT

SIZE	CODE IDENT NO.	DRAWING NO.
B	19204	7791069

SCALE 10/1 SHEET 1 OF 1

AMSWE Form 403B, 13 Nov 70

EDITION OF 29 JUL 69 MAY BE USED.

NOTES:

1. FINISH 63 EXCEPT AS NOTED.
2. ALL EDGES SHALL BE BROKEN .005+.010 UNLESS OTHERWISE SPECIFIED.
3. DIAMETERS AT MUZZLE SHALL NOT BE LARGER THAN DIAMETERS AT BREECH.
4. MATERIAL: STEEL, SPEC MIL-S-11595: ONLY ORD 4150 OR CHROME-MOLY-VANADIUM. (B5)
5. HEAT TREATMENT, AUSTEMPER HEAT AT 1540°F – 1560°F. QUENCH INTO AUSTEMPERING BATH AT APPROXIMATELY 650°F – 675°F. HOLD IN BATH FOR 30 MINUTES MINIMUM. COOL IN AIR. RETEMPER AT 400°F MINIMUM TO ROCKWELL HARDNESS D53.0-D58.5. HEAT TREATMENT SHALL BE APPLIED UNIFORMLY THROUGHOUT TO INSURE 90% MINIMUM BAINITIC STRUCTURE. HEAT TREATMENT METHOD IS FOR GUIDANCE EXCEPT THAT TEMPERING TIME SHALL NOT BE REDUCED BELOW THAT SPECIFIED Dz
6. AREAS TO BE PLATED SHALL BE FREE OF BURRS.
7. SURFACES TO BE CHROMIUN PLATED SHALL BE ELECTROPOLISHED TO A MINIMUN DEPTH OF .001 PRIOR TO PLATE.
8. BARREL SHALL NOT BE PROOF FIRED PRIOR TO CHROMIUN PLATING.
9. NO MECHANICAL METHODS FOR REMOVAL OF CHROMIUM FROM THE BORE PERMITTED.
10. APPLY MARKINGS INDICATED. MARKINGS SHALL BE LOCATED THROUGH EJECTION PORT IN SLIDE WITH ACTION CLOSED.
11. FINAL PROTECTIVE FINISH:
    A. FINISH 1.2.2.1 OF MIL-STD-171 ON ALL INTERNAL SURFACES.
    B. FINISH 5.3.1.2 OF MIL-STD-171 ON ALL UNPLATED AREAS. (C)
12. AFTER PROOF FIRING, CHROMIUM PLATE SHALL BE FREE FROM BLISTERS, PITS, FLAKING, PEELING, AND CRACKS.
13. CHROMIUM PLATE AND FINISH 5.3.1.2 OF MIL-STD-171 SHALL TERMINATE ANYWHERE ON THESE SURFACES.
14. DIMENSIONS FOR PLATED SURFACES SHALL APPLY AFTER CHROMIUM PLATING.
15. THICKNESS OF CHROMIUM PLATING SHALL BE .0015 ± .0005 AS DETERMINED AT LOCATION -H-. (B3)
16. BARREL SHALL WITHSTAND THE FIRING OF ONE GOVERNMENT HIGH PRESSURE TEST CARTRIDGE WITHOUT EVIDENCE OF FAILURE AS DETERMINED BY MAGNETIC PARTICLE INSPECTION FOR CRACKS, SEAMS, AND OTHER INJURIOUS DEFECTS, USING A CURRENT OF 700 TO 800 AMPERES, BY THE CIRCULAR MAGNETIZATION METHOD. APPLY MAGNETIC TEST MARK "M" AND PROOF FIRING MARK "P" TO BARRELS MEETING THIS REQUIREMENT
17. SURFACES REQUIRING 32 OR FINER ROUGHNESS HEIGHT RATING MAY BE LEFT BRIGHT. (B4)
18. MIL-W-13855 APPLIES. (C)
19.
20. * STEP PERMISSIBLE WITHIN AREA INDICATED BOTH SIDE.

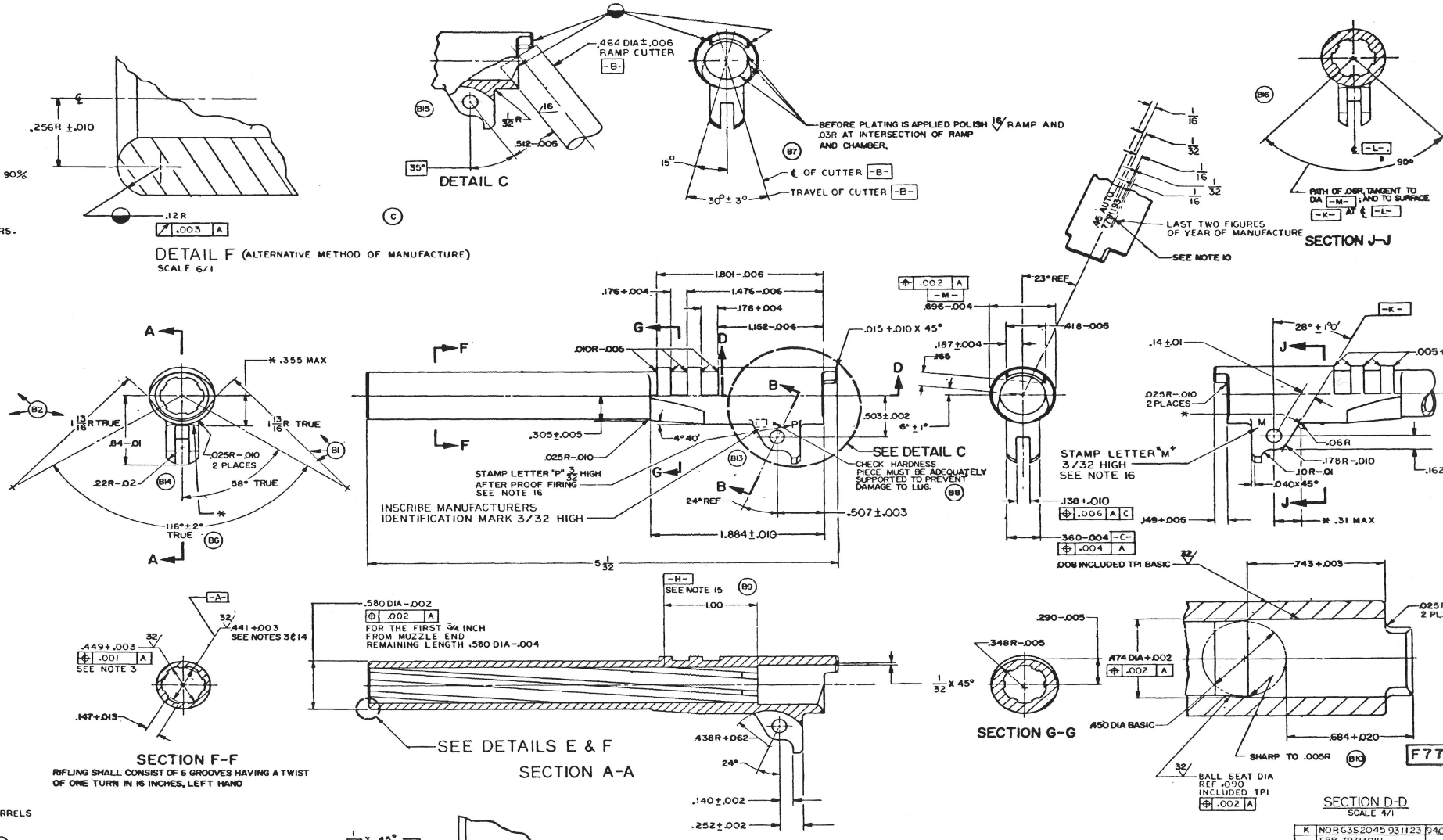

DISTRIBUTION STATEMENT A
APPROVED FOR PUBLIC RELEASE;
DISTRIBUTION IS UNLIMITED.

K	NORG3S2045 931123	940
J	ERR Z9Z1301U ECP G9S2109, 90-01-23	91-0
H	NORG7S2040 870719	OCK
G	NOR W2[illegible] ECP W3S3150 840824 ECP W4S2055 840824 ECP W4S2022 841022	850
F	NORW2S0013 82-04-28	85-0
E	NORW05S009 80-09-2	81-0
D	N-[illegible]-S-2022 79-09-13	80-0
C	(4) SEE ERR HOR 30587-2	19
B	(1-18) SEE ECO SA26599	3 JA
A	REDRAWN AND REVISED	87
	SEE ECO SA26319	

REVISIONS

CURRENT DESIGN ACTIVITY CAGE CODE 19200
U.S. ARMY
ARMAMENT RESEARCH, DEVELOPMENT AND ENGINEERING CENTER
PICATINNY ARSENAL, NEW JERSEY 07806-5000

PART NO. 7791193

PHYSICAL PROPERTIES		
	D12006325	PISTOL, M15
	F7265655	PISTOL, M15A1
APPLICATION		
DO	SEE NOTE 10	

TOLERANCES ON DECIMALS .01
ANGLES 1°
MATERIAL SEE NOTE 4
HEAT TREATMENT SEE NOTE 5
FINAL PROTECTIVE FINISH SEE NOTE 11

ORIGINAL DATE 6 APR 61
OF DRAWING
DRAFTSMAN NEW
DESIGNER C.R.C.
TRACED
CHECKED
SUPERVISOR
APPROVED BY ORDER OF THE CHIEF OF ARMAMENT

BARREL

SPRIN ARM SPRING

CODE IDENT NO. 19205
SIZE F
SCALE 2/1
UNIT WT 20 LB